Self Diagnosis Supported model

SERVICE MANUAL AA-2U CHASSIS

MODEL NAME	REMOTE COMMANDER	DESTINATION	CHASSIS NO.
KV-32FV27	RM-Y182	US	SCC-S44KA
KV-32FV27	RM-Y182	CND	SCC-S45GA

Sony KV-32FV27 / 36FS13 /36FS17 / 36FV27/ 38FS17

www.electronicsrepair.net

KV-36FV27

RM-Y182

TRINITRON® COLOR TELEVISION

SONY®

9-965-901-01

Downloaded from www.Manualslib.com manuals search engine

TABLE OF CONTENTS

SECTION TITLE	PAGE
Specifications	3
Warnings and Cautions	4
Safety Check-Out	5
Self-Diagnostic Function	6
1. Disassembly	
1-1. Rear Cover Removal	8
1-2. Chassis Assembly Removal	8
1-3. Service Position	8
1-4. Picture Tube Removal	9
Anode Cap Removal Procedure	9
2. Set-Up Adjustments	
2-1. Beam Landing	10
2-2. Convergence	11
2-3. Focus	13
2-4. Screen (G2)	13
2-5. White Balance Adjustments	13
3. Safety Related Adjustments	
3-1. ⋈ R530, R531 Confirmation Method (Hold-Down Confirmation) and Readjustments	14
3-2. B+ Voltage Confirmation and Adjustment	14
4. Circuit Adjustments	
4-1. Setting the Service Adjustment Mode	15
4-2. Memory Write Confirmation Method	15
4-3. Remote Adjustment Buttons and Indicators	15
4-4. Adjustment Items	16
4-5. Feature ID Map	21
4-6. Program Palette Settings	21
4-7. A Board Adjustments	22
5. Diagrams	
5-1. Circuit Boards Location	25
5-2. Printed Wiring Boards and Schematic Diagrams Information	25
5-3. Block Diagram and Schematics	26
A Board	32
AK Board	37
C Board	41
G Board	43
HA Board	45
HB Board	46
HS Board	47
HX Board	48
T Board	49
UX Board	50
UY Board	56
WA Board	63
5-4. Semiconductors	65
6. Exploded Views	
6-1. Chassis (KV-36FS13/36FS17/38FS17 ONLY)	66
6-2. Chassis (KV-32FV27/36FV27 ONLY)	67
6-3. Picture Tube Removal	68
7. Electrical Parts List	69

Downloaded from www.Manualslib.com manuals search engine

SPECIFICATIONS

	KV-36FS13 KV-36FS17 KV-38FS17	KV-36FV27	KV-32FV27
Power requirements	120V, 60Hz	120V, 60Hz	120V, 60Hz
Number of Inputs/Outputs			
Video [1]	3	3	3
S Video [2]	1	2	2
Y, P_B, P_R [3]	1	1	1
Audio [4]	4	4	4
Audio Out [5]	1	1	1
Monitor Out	-	1	1
Control-S (IN/OUT)	-	1	1
Speaker output (W)	10W x 2	15W x 2	15W x 2
Power Consumption (W)			
In use (Max)	200W	210W	210W
In Standby	2W	2W	2W
Dimensions(W/H/D)			
mm	910 x 791 x 650	975 x 747 x 633	882 x 687 x 592
in	35 7/8 x 31 1/8 x 25 5/8	38 3/8 x 29 3/4 x 24 7/8	34 3/4 x 27 x 23 1/4
Mass			
kg	100 kg	107 kg	80 kg
lbs	220 lbs.	236 lbs.	176 lbs.

1) 1 Vp-p 75 ohms unbalanced, sync negative
2) Y: 1 Vp-p 75 ohms unbalanced, sync negative
C: 0.286 Vp-p (Burst signal), 75 ohms
3) Y: 1.0 Vp-p, 75 ohms, sync negative; PB: 0.7 Vp-p, 75 ohms
PR: Vp-p, 75 ohms
4) 500 mVrms (100% modulation), Impedance: 47 kilohms
5) More than 408 mVrms at the maximum volume setting (variable)
More than 408 mVrms (fix); Impedance (output): 2 kilohms

Television system

American TV standard, NTSC

Channel coverage

VHF: 2-13/ UHF: 14-69/ CATV: 1-125

Picture tube

Flat Trinitron® tube

Visible screen size

32 inch picture measured diagonally (KV 32FV27 ONLY)
36 inch picture measured diagonally (All EXCEPT KV-32FV27)

Actual screen size

34-inch measured diagonally (KV 32FV27 ONLY)
38-inch measured diagonally (All EXCEPT KV-32FV27)

Antenna

75 ohm external terminal for VHF/UHF

Supplied Accessories

RM-Y180 (KV-36FS13 ONLY)
RM-Y181 (KV-36FS17 / 38FS17 ONLY)
RM-Y182 (KV-32FV27 / 36FV27 ONLY)
Battery size AA (R6) (2)
Wireless Stereo Headphones MDR-1F0230//K Set (KV-32FV27/ 36FV27 ONLY)
Battery size AA (R6) for Headphones (KV-32FV27/ 36FV27 ONLY)

Optional Assessories

AV Cable: VMC-810/820/830 HG
Audio Cable: RKC-515HG
Component Video Cable: VMC-10/30 HG
TV Stand: SU-36FD4 (ALL EXCEPT KV-32FV27)
TV Stand: SU 32FD4 (KV-32FV27 ONLY)

Design and specifications are subject to change without notice.

(●) SRS (SOUND RETRIEVAL SYSTEM)
(KV-32FV27/ 36FV27 ONLY)

The (●) SRS (SOUND RETRIEVAL SYSTEM) is manufactured by Sony Corporation under license from SRS Labs, Inc. It is covered by U.S. Patent No. 4,748,669. Other U.S. and foreign patents pending.

The word 'SRS' and the SRS symbol (●) are registered trademarks of SRS Labs, Inc. BBE and BBE symbol are trademarks of BBE Sound, Inc. and are licensed by BBE Sound, Inc. under U.S. Patent No. 4,638,258

Downloaded from www.Manualslib.com manuals search engine

WARNINGS AND CAUTIONS

CAUTION

Short circuit the anode of the picture tube and the anode cap to the metal chassis, CRT shield, or carbon painted on the CRT, after removing the anode.

WARNING!!

An isolation transformer should be used during any service to avoid possible shock hazard, because of live chassis. The chassis of this receiver is directly connected to the ac power line.

⚠ SAFETY-RELATED COMPONENT WARNING!!

Components identified by shading and ⚠ mark on the schematic diagrams, exploded views, and in the parts list are critical for safe operation. Replace these components with Sony parts whose part numbers appear as shown in this manual or in supplements published by Sony. Circuit adjustments that are critical for safe operation are identified in this manual. Follow these procedures whenever critical components are replaced or improper operation is suspected.

ATTENTION!!

Apres avoir deconnecte le cap de l'anode, court-circuiter l'anode du tube cathodique et celui de l'anode du cap au chassis metallique de l'appareil, ou la couche de carbone peinte sur le tube cathodique ou au blindage du tube cathodique.

Afin d'eviter tout risque d'electrocution provenant d'un châssis sous tension, un transformateur d'isolement doit etre utilisé lors de tout dépannage. Le châssis de ce récepteur est directement raccordé à l'alimentation du secteur.

⚠ ATTENTION AUX COMPOSANTS RELATIFS A LA SECURITE!!

Les composants identifies par une trame et par d'une importance marque ⚠ sur les schemas de principe, les vues explosees et les listes de pieces sont d'uneimportance critique pour la securite du fonctionnement. Ne les remplacer que par des composants Sony dont le numero de piece est indique dans le present manuel ou dans des supplements publies par Sony. Les reglages de circuit dont l'importance est critique pour la securite du fonctionnement sont identifies dans le present manuel. Suivre ces procedures lors de chaque remplacement de composants critiques, ou lorsqu'un mauvais fonctionnement suspecte.

Downloaded from www.Manualslib.com manuals search engine

SAFETY CHECK-OUT

After correcting the original service problem, perform the following safety checks before releasing the set to the customer:

1. Check the area of your repair for unsoldered or poorly soldered connections. Check the entire board surface for solder splashes and bridges.

2. Check the interboard wiring to ensure that no wires are "pinched" or touching high-wattage resistors.

3. Check that all control knobs, shields, covers, ground straps, and mounting hardware have been replaced. Be absolutely certain that you have replaced all the insulators.

4. Look for unauthorized replacement parts, particularly transistors, that were installed during a previous repair. Point them out to the customer and recommend their replacement.

5. Look for parts which, though functioning, show obvious signs of deterioration. Point them out to the customer and recommend their replacement.

6. Check the line cords for cracks and abrasion. Recommend the replacement of any such line cord to the customer.

7. Check the B+ and HV to see if they are specified values. Make sure your instruments are accurate; be suspicious of your HV meter if sets always have low HV.

8. Check the antenna terminals, metal trim, "metallized" knobs, screws, and all other exposed metal parts for AC leakage. Check leakage as described below.

Leakage Test

The AC leakage from any exposed metal part to earth ground and from all exposed metal parts to any exposed metal part having a return to chassis, must not exceed 0.5 mA (500 microamperes). Leakage current can be measured by any one of three methods.

1. A commercial leakage tester, such as the Simpson 229 or RCA WT-540A. Follow the manufacturers' instructions to use these instructions.

2. A battery-operated AC milliammeter. The Data Precision 245 digital multimeter is suitable for this job.

3. Measuring the voltage drop across a resistor by means of a VOM or battery-operated AC voltmeter. The "limit" indication is 0.75 V, so analog meters must have an accurate low voltage scale. The Simpson's 250 and Sanwa SH-63TRD are examples of passive VOMs that are suitable. Nearly all battery-operated digital multimeters that have a 2 VAC range are suitable (see Figure A).

How to Find a Good Earth Ground

A cold-water pipe is a guaranteed earth ground; the cover-plate retaining screw on most AC outlet boxes is also at earth ground. If the retaining screw is to be used as your earth ground, verify that it is at ground by measuring the resistance between it and a cold-water pipe with an ohmmeter. The reading should be zero ohms.

If a cold-water pipe is not accessible, connect a 60- to 100-watt trouble-light (not a neon lamp) between the hot side of the receptacle and the retaining screw. Try both slots, if necessary, to locate the hot side on the line; the lamp should light at normal brilliance if the screw is at ground potential (see Figure B).

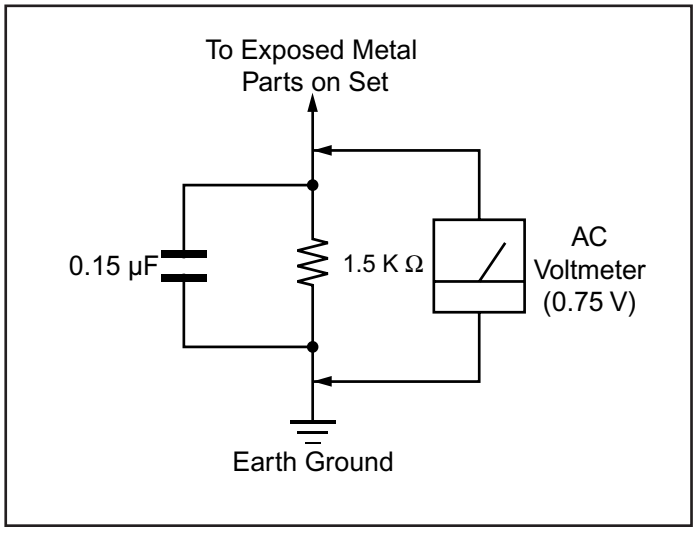

Figure A. Using an AC voltmeter to check AC leakage.

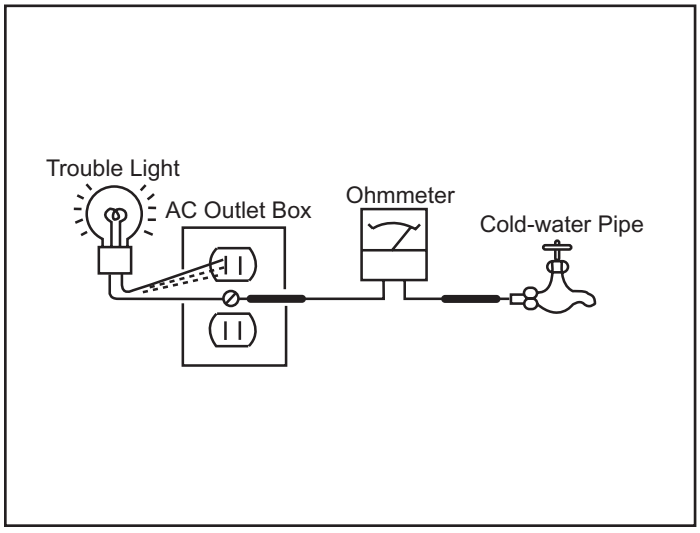

Figure B. Checking for earth ground.

Downloaded from www.Manualslib.com manuals search engine

SELF-DIAGNOSTIC FUNCTION

Self Diagnosis Supported model

The units in this manual contain a self-diagnostic function. If an error occurs, the STANDBY/TIMER LED will automatically begin to flash. The number of times the LED flashes translates to a probable source of the problem. A definition of the STANDBY/TIMER LED flash indicators is listed in the instruction manual for the user's knowledge and reference. If an error symptom cannot be reproduced, the Remote Commander can be used to review the failure occurrence data stored in memory to reveal past problems and how often these problems occur.

Diagnostic Test Indicators

When an error occurs, the STANDBY/TIMER LED will flash a set number of times to indicate the possible cause of the problem. If there is more than one error, the LED will identify the first of the problem areas.

Results for all of the following diagnostic items are displayed on screen. No error has occurred if the screen displays a "0".

Diagnostic Item	No. of times STANDBY/ TIMER lamp flashes	Display Result	Probable Cause Location	Detected Symptoms
Power does not turn on	Does not light	N/A	• Power cord is not plugged in. • Fuse is burned out (F601). (G Board)	• Power does not come on. • No Power is supplied to the TV. • AC Power supply is faulty.
+B overcurrent (OCP)*	N/A	N/A	• H.OUT (Q502) is shorted.(A Board) • IC1701 is shorted. (C Board)	• Power does not come on. • Load on power line is shorted
+B overvoltage (OVP)*	N/A	N/A	• IC643 or T603 is open. (G Board)	• Power does not come on.
V-STOP	4 times	4:0 or 4:1	• +13V is not supplied. (A Board) • IC561 is faulty. (A Board)	• Has entered standby state after horizontal raster. • Vertical deflection pulse is stopped. • Power line is shorted or power supply is stopped.
IK (AKB)	5 times	5:0 or 5:1	• Video OUT (IC561) is faulty. (A Board) • IC355 is faulty. (A Board) • Screen (G2) is improperly adjusted.**	• No raster is generated. • CRT Cathode current detection reference • Pulse output is small.

* If a +B overcurrent is detected, stoppage of the vertical deflection is detected simultaneously. The symptom that is diagnosed first by the microcontroller is displayed on the screen.

** Refer to Screen (G2) Adjustments in Section 2-4. of this manual.

Display of Standby/Timer LED Flash Count

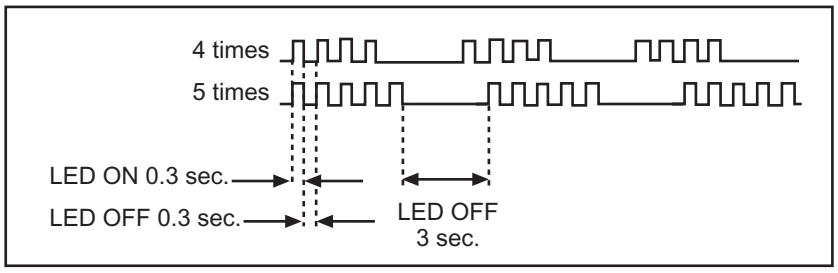

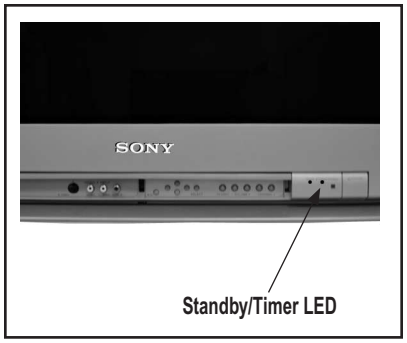

Diagnostic Item	Flash Count*
V-STOP	4 times
IK (AKB)	5 times

*One flash count is not used for self-diagnostic.

Stopping the Standby/Timer LED Flash

Turn off the power switch on the TV main unit or unplug the power cord from the outlet to stop the STANDBY/TIMER LAMP from flashing.

Downloaded from www.Manualslib.com manuals search engine

Self-Diagnostic Screen Display

For errors with symptoms such as “power sometimes shuts off” or “screen sometimes goes out” that cannot be confirmed, it is possible to bring up past occurrences of failure on the screen for confirmation.

To Bring Up Screen Test

In standby mode, press buttons on the Remote Commander sequentially, in rapid succession, as shown below:

Display → Channel 5 → Sound Volume − → Power ON

Note that this differes from entering the Service Mode (Sound volume +).

Self-diagnostic Screen Display

SELF DIAGNOSIS	
2: +B OCP	N/A
3: +B OVP	N/A
4: VSTOP	0
5: AKB	1
101: WDT	24

Numeral “0” means that no fault was detected.
Numeral “1” means a fault was detected one time only.

Handling of Self-Diagnostic Screen Display

Since the diagnostic results displayed on the screen are not automatically cleared, always check the self-diagnostic screen during repairs. When you have completed the repairs, clear the result display to “0”.
Unless the result display is cleared to “0”, the self-diagnostic function will not be able to detect subsequent faults after completion of the repairs.

Clearing the Result Display

To clear the result display to “0”, press buttons on the Remote Commander sequentially when the diagnostic screen is displayed, as shown below:

Channel 8 → ENTER

Quitting the Self-Diagnostic Screen

To quit the entire self-diagnostic screen, turn off the power switch on the Remote Commander or the main unit.

Self-Diagnostic Circuit

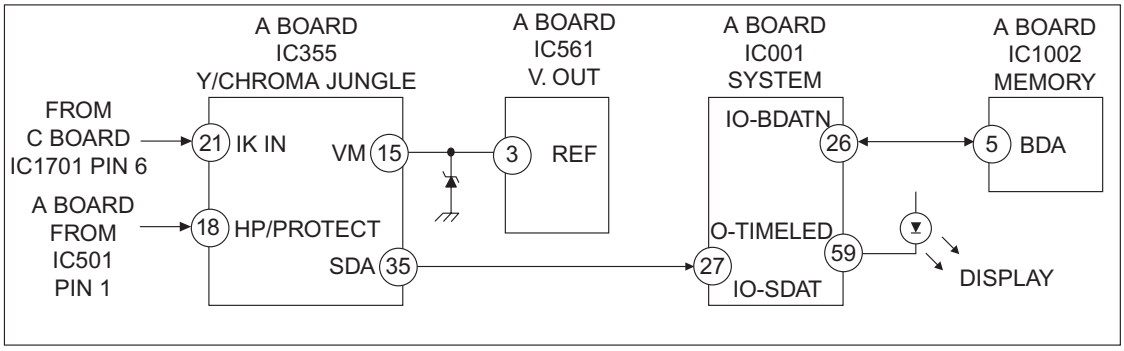

+B overcurrent (OCP) Occurs when an overcurrent on the +B (135V) line is detected by pin 18 of IC355 (A Board). If the voltage of pin 18 of IC355 (A Board) is less than 1V when V.SYNC is more than seven verticals in a period, the unit will automatically turn off.

+B overvoltage (OVP) Occurs when the feedback circuit from +B opens IC643 or T603 or any other associated feedback components.

V-STOP Occurs when an absence of the vertical deflection pulse is detected by pin 15 of IC355 (A Board). Power supply will shut down when waveform interval exceeds 2 seconds.

IK (AKB) If the RGB levels* do not balance within 2 seconds after the power is turned on, this error will be detected by IC355 (A Board). TV will stay on, but there will be no picture.

NOTE:

Watch Dog Timer Indicates how many times the Watch Dog Timer functions have been activated. Whenever micro is reset by the Watch Dog Timer, this number is incremented. Maximum number is 255.

* Refers to the RGB levels of the AKB detection Ref pulse that detects 1K.

Downloaded from www.Manualslib.com manuals search engine

SECTION 1: DISASSEMBLY

1-1. REAR COVER REMOVAL

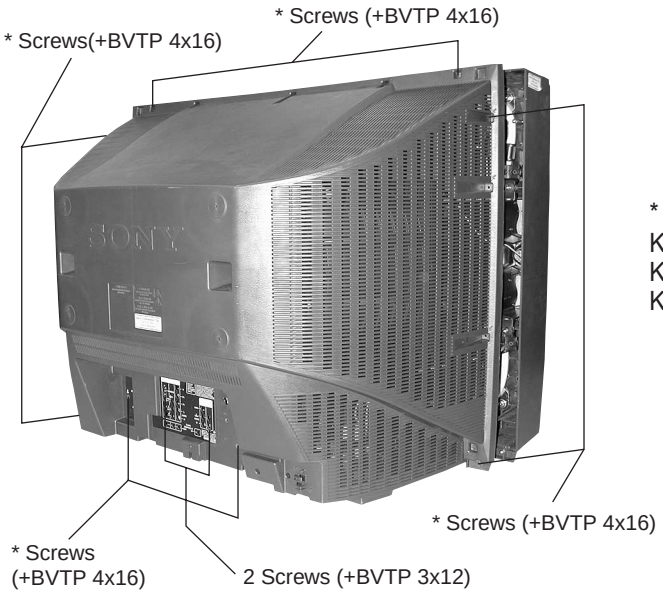

* (+BVTP 4 x 16) Screw Legend:
KV-32FV27 = 14 Screws Total
KV-36FV27 = 16 Screws Total
KV-36FS13/ 36FS17 / 38FS17= 15 Screws Total

1-2. CHASSIS ASSEMBLY REMOVAL

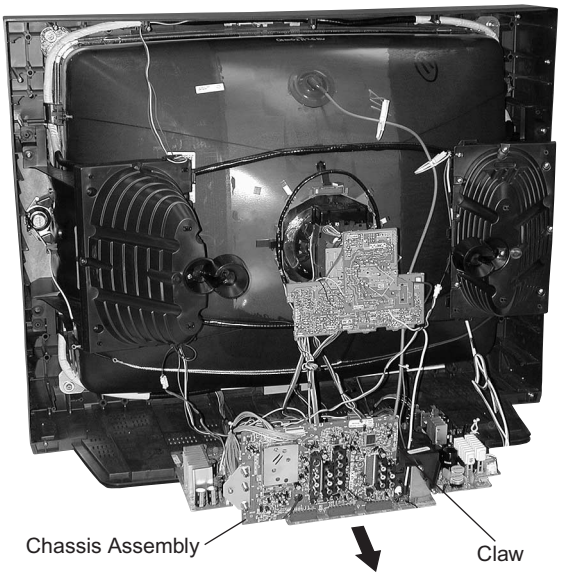

1-3. SERVICE POSITION

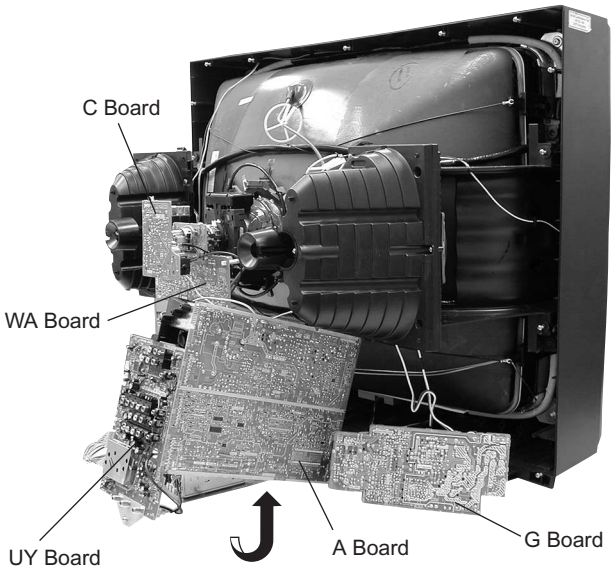

Downloaded from www.Manualslib.com manuals search engine

1-4. PICTURE TUBE REMOVAL

WARNING: BEFORE REMOVING THE ANODE CAP
High voltage remains in the CRT even after the power is disconnected. To avoid electric shock, discharge CRT before attempting to remove the anode cap. Short between anode and CRT coated earth ground strap.

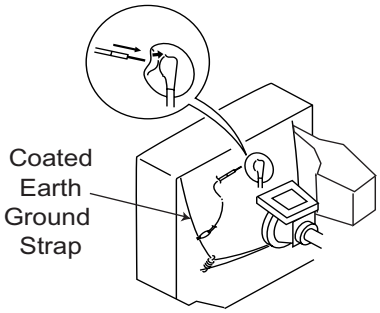

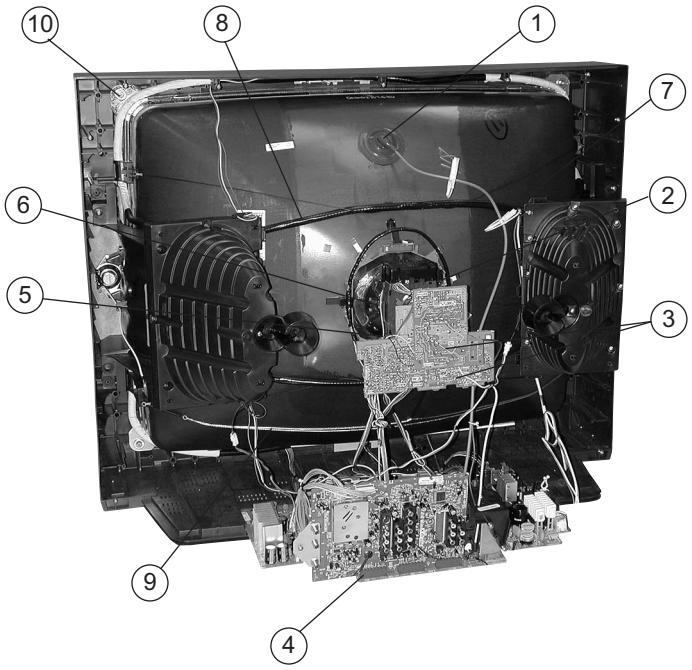

1. Discharge the anode of the CRT and remove the anode cap.
2. Unplug all interconnecting leads from the deflection yoke, neck assembly, degaussing coils and CRT grounding strap.
3. Remove the C and WA Board from the CRT.
4. Remove the chassis assembly.
5. Loosen the neck assembly fixing screw and remove.
6. Loosen the deflection yoke fixing screw and remove.
7. Place the set with the CRT face down on a cushion and remove the degaussing coil holders.
8. Remove the degaussing coils.
9. Remove the CRT grounding strap and spring tension devices.
10. Unscrew the four CRT fixing screws [located on each CRT corner] and remove the CRT [Take care not to handle the CRT by the neck].

ANODE CAP REMOVAL PROCEDURE

WARNING: High voltage remains in the CRT even after the power is disconnected. To avoid electric shock, discharge the CRT **before** attempting to remove the anode cap. Short between anode and coated earth ground strap of CRT.
NOTE: After removing the anode cap, short circuit to either the metal chassis, CRT shield, or carbon painted on the CRT.

REMOVAL PROCEDURES

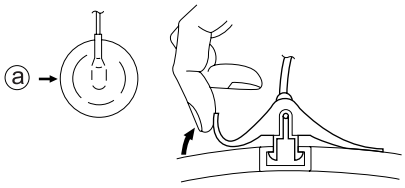

① Turn up one side of the rubber cap inthe direction indicated by arrow ⓐ .

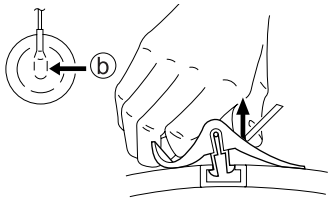

② Use your thumb to pull the rubber cap firmly in the direction indicated by arrow ⓑ .

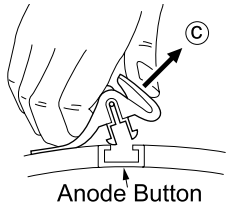

③ When one side of the rubber cap separates from the anode button, the anode cap can be removed by turning the rubber cap and pulling it in the direction of arrow ⓒ .

HOW TO HANDLE AN ANODE CAP

1. Do not use sharp objects which may cause damage to the surface of the anode cap.
2. To avoid damaging the anode cap, do not squeeze the rubber covering too hard. A material fitting called a shatter-hook terminal is built into the rubber.
3. Do not force turn the foot of the rubber cover. This may cause the shatter-hook terminal to protrude and damage the rubber.

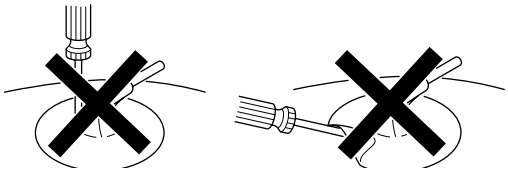

Downloaded from www.Manualslib.com manuals search engine

SECTION 2: SET-UP ADJUSTMENTS

The following adjustments should be made when a complete realignment is required or a new picture tube is installed.

These adjustments should be performed with rated power supply voltage unless otherwise noted.

The controls and switch should be set as follows unless otherwise noted:

PICTURE control: normal
BRIGHTNESS control: normal

Perform the adjustments in order as follows:

1. Beam Landing
2. Convergence
3. Focus
4. Screen (G2)/White Balance

Note Test Equipment Required:

1. Color Bar Pattern Generator
2. Degausser
3. DC Power Supply
4. Digital Multimeter
5. Oscilloscope
6. CRT Analyzer

2-1. BEAM LANDING

Preparation:

- Input a white pattern signal.
- Face the picture tube in an East or West direction to reduce the influence of geomagnetism.

NOTE: Do not use the hand degausser because it magnetizes the CRT .

1. Input white pattern from pattern generator.
2. Loosen the deflection yoke mounting screw, and set the purity control to the center as shown below:

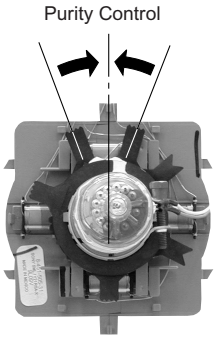

3. Input green pattern from pattern generator.
4. Move the deflection yoke backward, and adjust with the purity control so that green is in the center and red and blue are even on both sides.

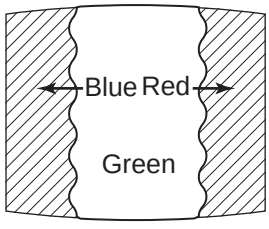

5. Move the deflection yoke forward, and adjust so that the entire screen becomes green.

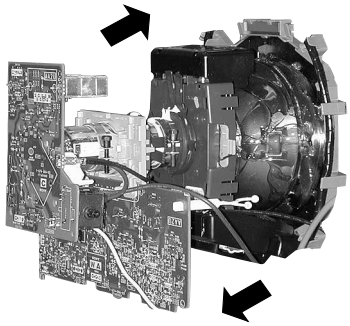

6. Switch over the raster signal to red and blue and confirm the condition.
7. When the position of the deflection yoke is determined, tighten it with the deflection yoke mounting screw.
8. When landing at the corner is not right, adjust by using the disk magnets.

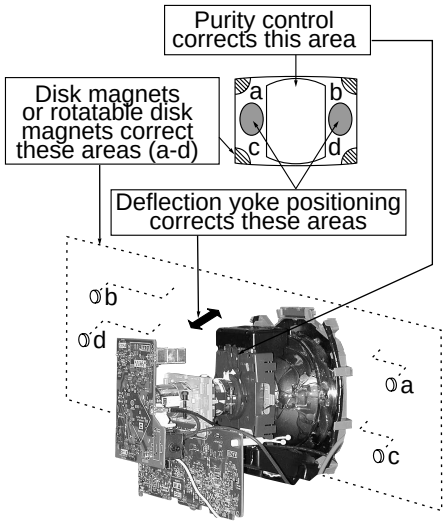

Downloaded from www.Manualslib.com manuals search engine

2-2. CONVERGENGE

Preparation:

- Perform FOCUS, V. LIN and V. SIZE adjustments.
- Set BRIGHTNESS control to minimum.
- Input dot pattern.

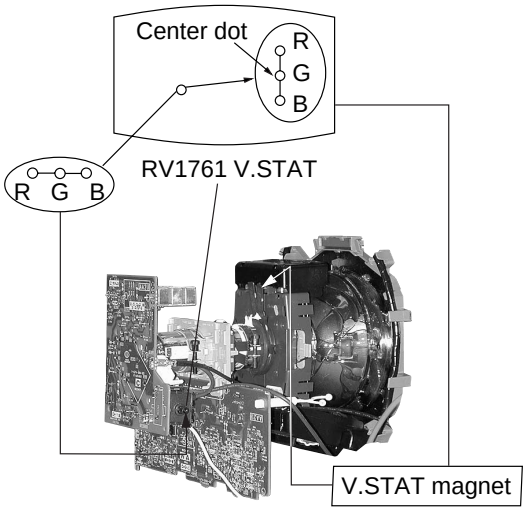

VERTICAL AND HORIZONTAL STATIC CONVERGENCE

1. Adjust V. STAT magnet to converge red, green and blue dots in the center of the screen (Vertical movement).

Tilt the V. STAT magnet and adjust static convergence to open or close the V. STAT magnet.

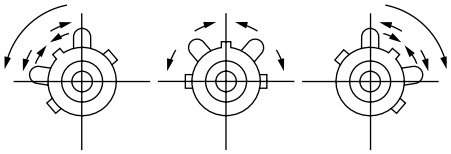

2. When the V. STAT magnet is moved in the direction of arrow a and b, red, green, and blue dots move as shown below:

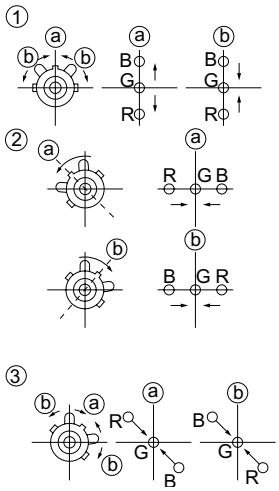

OPERATION OF BMC (HEXAPOLE) MAGNET

The respective dot positions resulting from moving each magnet interact, so perform adjustment while tracking.

1. Use the V.STAT tabs to adjust the red, green, and blue dots so they line up at the center of the screen (move the dots in a horizontal direction).

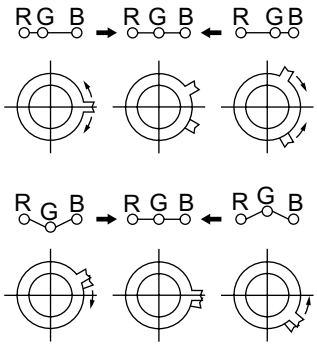

Y SEPARATION AXIS CORRECTION MAGNET ADJUSTMENT

1. Input cross-hatch pattern, adjust PICTURE to minimum and BRIGHTNESS to normal.
2. Adjust the deflection yoke upright so it touches the CRT.
3. Adjust so that the Y separation axis correction magnet on the neck assembly is symmetrical from top to bottom (open state).

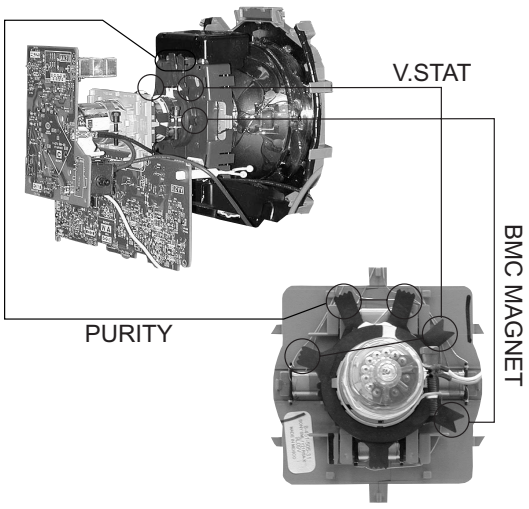

4. Return the deflection yoke to its original position.

Downloaded from www.Manualslib.com manuals search engine

DYNAMIC CONVERGENCE ADJUSTMENT

Before starting, perform Vertical and Horizontal Static Convergence Adjustment.

1. Slightly loosen deflection yoke screw.
2. Remove deflection yoke spacers.
3. Move the deflection yoke for best convergence as shown below:

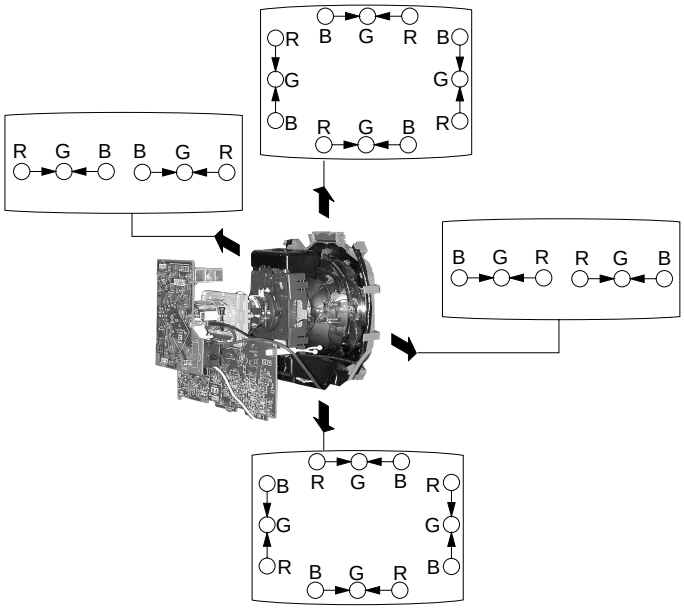

4. Tighten the deflection yoke screw.
5. Install the deflection yoke spacers.

SCREEN-CORNER CONVERGENCE

1. Affix a permalloy assembly corresponding to the misconverged areas:

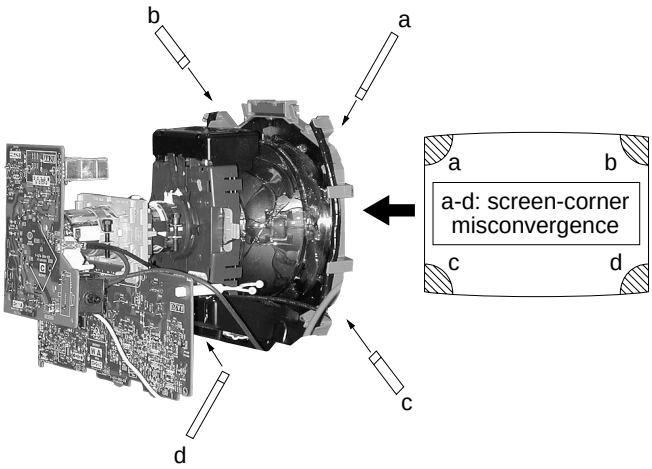

TLH PLATE ADJUSTMENT

Preparation:

- Input crosshatch pattern.
- Adjust Picture Quality to standard, Picture and Brightness to 50%, and Other to standard.
- Adjust the Horizontal Convergence of red and blue dots by tilting the TLH plate on the deflection yoke.

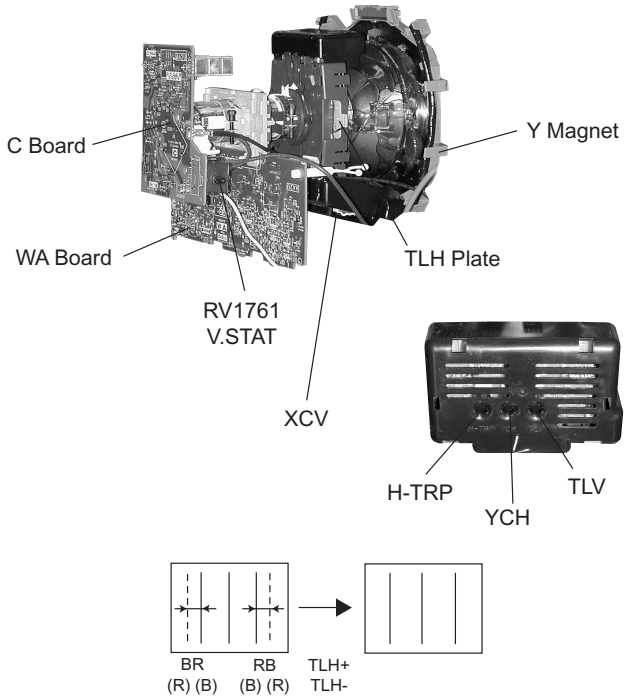

1. Adjust XCV core to balance X axis.
2. Adjust YCH VR to balance Y axis.
3. Adjust vertical red and blue convergence with V.TILT (TLV VR).

Perform adjustments while tracking items 1 and 2.

4. Adjust Y MAGNET to correct V.BOW Geometery Distortion.
5. Adjust H-TRP to correct H.Trapezoid Geometry Distortion.

After adjusting items 4 and 5, confirm overall geometry again.

Downloaded from www.Manualslib.com manuals search engine

2-3. FOCUS

1. Input monoscope signal.
2. Set user controls to normal.
3. Set video mode to STANDARD.
4. Set the PICTURE to maximum.
5. Adjust at 325 Mark for best center/corner focus balance.
6. Receive an entire white signal. Make sure Magenta Ring is at an acceptable level.

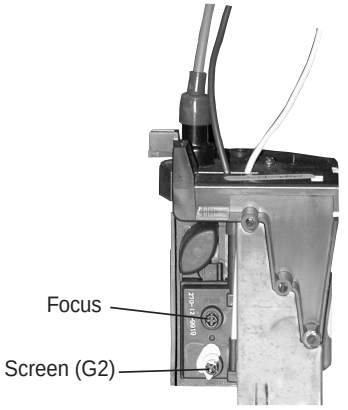

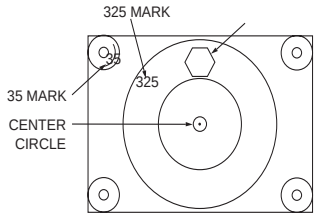

2-4. SCREEN (G2)

1. Input dot pattern from the pattern generator.
2. Set the user controls to NORMAL.
3. Attach the G2-Jig to the C Board.
4. Adjust RCUT, GCUT, BCUT, and SBRT in service mode with an oscilloscope so that voltages on the red, green, and blue cathodes are 170 ± 2.0 VDC.
5. Observe the screen and adjust SCREEN (G2) VR to obtain the faintly visible background of dot signal.
6. Push the TEST + JUMP (+ Channel) to cut off the signal. The screen should be bright or dark. Brightness of raster must be increased when adjusting.
7. Adjust screen VR until the screen is slightly cut off, or scarcely lights up. A signal cannot be seen when the brightness of the raster is high.
8. Push the JUMP again to release the cut off.

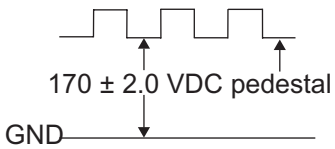

2-5. WHITE BALANCE ADJUSTMENTS

NO.	Disp.	Item	All Models
24	RDRV	Red Drive	*
25	GDRV	Green Drive	31
26	BDRV	Blue Drive	31
27	RCUT	Red Cut-off	14:Fix
28	GCUT	Green Cut-off	7
29	BCUT	Blue Cut-off	7
36	SBRT	Sub Bright	7

1. Set program palette to STANDARD and push RESET.
2. Input an entire white signal.
3. Set to Service Adjustment Mode.
4. Set the PICTURE and BRIGHT to minimum.
5. Adjust with SBRT if necessary.
6. Set RCUT to “14”.
7. Select GCUT and BCUT with 1 and 4 .
8. Adjust with 3 and 6 for the best white balance.
9. Set the PICTURE and BRIGHT to maximum.
10. Select GDRV and BDRV with 1 and 4 .
11. Adjust with 3 and 6 for the best white balance.
12. Write into the memory by pressing MUTING then ENTER.
13. Repeat steps 1-12 for GDR4, BDR4, GCU4 and BCU4 using Video 4 input.

*Use values from Sub Contrast Adjustments

NOTE: White Balance should be adjusted after Sub Contrast because RDRV is also used in Sub Contrast Adjustment (See Page 22).

Downloaded from www.Manualslib.com manuals search engine

SECTION 3: SAFETY RELATED ADJUSTMENTS

3-1. ⋈ R530, R531 CONFIRMATION METHOD (HOLD-DOWN CONFIRMATION) AND READJUSTMENTS

Always perform the following adjustments when replacing the following components marked with a ◪ mark on the schematic diagram:

Part Replaced (◪)	Adjustment (⋈)
R387, R550, R529, R530, R531, R532, R533, D519, D520, D521, IC501, C531, C532, T503, IC351, Q301, R356, R359, R361, D302.....A Board IC643, R661.....G Board	HV HOLD-DOWN R530,R531

PREPARATION BEFORE CONFIRMATION

1. Using a Variac, apply AC input voltage: 120+2.0/-0.0 VAC.
2. Turn the POWER switch ON.
3. Input a white signal and set the PICTURE and BRIGHT controls to maximum.
4. Confirm that the voltage of more than 23.0 VDC appears between TP85 and ground on the A Board.

HOLD-DOWN OPERATION CONFIRMATION

1. Connect the current meter between Pin 11 of the FBT (T503) and the PWB land where Pin 11 would normally attach (See Figure 1).
2. Input a dot signal and set PICTURE and BRIGHTNESS to minimum: IABL = 2175 + 100/ -325 µA.
3. Confirm the voltage of A Board TP91 is 135 ± 1.5 VDC.
4. Connect the digital voltmeter and the DC power supply to TP85 and ground (See Figure 1).
5. Increase the DC power voltage gradually until the picture blanks out.
6. Turn DC power source off immediately.
7. Read the digital voltmeter indication (standard = 27.24 +0.0 / -0.1 VDC) (KV-32FV27 ONLY), (standard = 27.24 ± 0.1 VDC) (ALL EXCEPT KV-32FV27).
8. Input a white signal and set PICTURE and BRIGHTNESS to maximum: IABL = 2175 + 100/ -325 µA.
9. Repeat steps 4 to 7.

HOLD-DOWN READJUSTMENT

If the setting indicated in Step 2 of Hold-Down Operation Confirmation cannot be met, readjustment should be performed by altering the resistance value of R530, R531 component marked with ⋈.

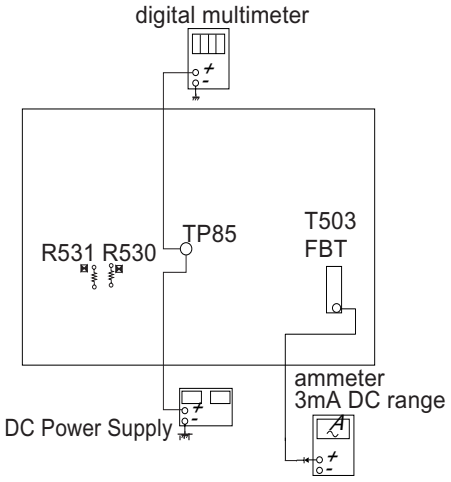

Figure 1

3-2. B+ VOLTAGE CONFIRMATION AND ADJUSTMENT

Always perform the following adjustments when replacing the following components, which are marked with ◪ on the schematic diagram on the G Board:

G BOARD:	IC643, R661

1. Using a Variac, apply AC input voltage: 130 + 2.0/-0.0 VAC
2. Input a monoscope signal.
3. Set the PICTURE control and the BRIGHT control to initial reset value.
4. Confirm the voltage of G Board CN641 between pin to ground is less than 136.5 VDC.
5. If step 4 is not satisfied, replace the R661 on G Board and repeat the above steps.

Downloaded from www.Manualslib.com manuals search engine

SECTION 4: CIRCUIT ADJUSTMENTS

ELECTRICAL ADJUSTMENTS BY REMOTE COMMANDER

Use the Remote Commander (RM-Y180, RM-Y181, RM-Y182) to perform the circuit adjustments in this section.

Test Equipment Required: 1. Pattern generator 2. Frequency counter 3. Digital multimeter 4. Audio oscillator

4-1. SETTING THE SERVICE ADJUSTMENT MODE

1. Standby mode (Power off).
2. Press [Display] ➡ Channel [5] ➡ Sound Volume [+] ➡ Power

SERVICE ADJUSTMENT MODE ON

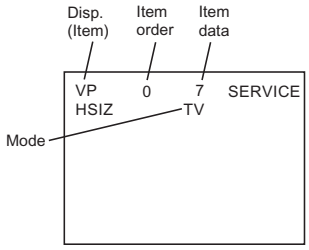

3. The CRT displays the item being adjusted.
4. Press [1] or [2] on the Remote Commander to select the item.
5. Press [3] or [6] on the Remote Commander to change the data.
6. Press [MUTING] then [ENTER] to write into memory.

SERVICE ADJUSTMENT MODE MEMORY

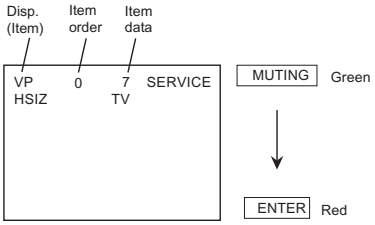

7. Press [8] then [ENTER] on the Remote Commander to initialize.

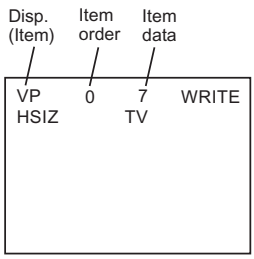

Carry out step 7 when adjusting IDs 0 to 7 and when replacing and adjusting IC002.

8. DO NOT turn off set until SERVICE appears.

4-2. MEMORY WRITE CONFIRMATION METHOD

1. After adjustment, pull out the plug from the AC outlet, then replace the plug in the AC outlet again.
2. Turn the power switch ON and set to Service Mode.
3. Call the adjusted items again to confirm they were adjusted.

4-3. REMOTE ADJUSTMENT BUTTONS AND INDICATORS

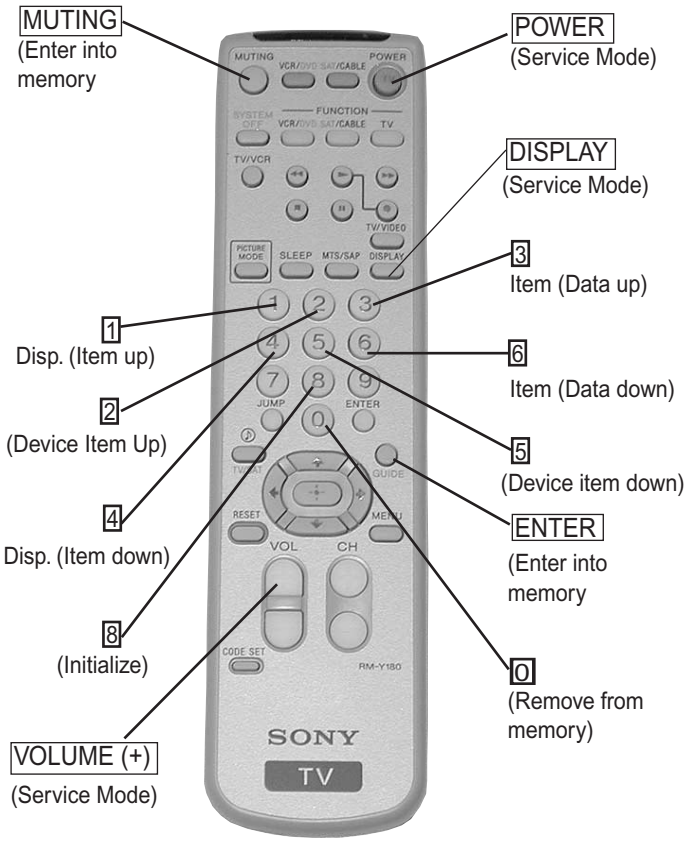

RM-Y182

Downloaded from www.Manualslib.com manuals search engine

4-4. ADJUSTMENT ITEMS (1 OF 6)

	Register Name		Description	Data Range	Adj/Fix	Initial Data	32" FV	36"/38" FS	36"/38" FV	Comments
0	HPOS	VP CXA2131AS	H-Position	0-63	*Adj*	7	7	7		0: 2ms delay, 63: 2ms advance
1	HSIZ		H-Size	0-63	*Adj*	10	10	10		EW DC bias, 0: -0.5V, 31: 0V, 63: +0.5V
2	VBOW		AFC Bow	0-15	*Adj*	6	6	6		0: top/bottom delay 900ns, 7: center, 15: top/bottom advance 900ns
3	VANG		AFC Angle	0-15	*Adj*	5	5	5		0: top delay/bottom advance 650ns, 7: center, 15: top advance/bottom delay 650ns
4	TRAP		Trapezium Adjustment	0-15	*Adj*	6	6	6		0: 1.5ms advance, 15: 1.5ms delay
5	PAMP		Pin Compensation	0-63	*Adj*	32	32	32		0: 0.15Vpp, 31: 0.7Vpp, 63: 1.3Vpp
6	UCPN		Upper Corner Pin	0-63	*Adj*	36	36	36		0: -0.4V, 63: +0.4V
7	LCPN		Lower Corner Pin	0-63	*Adj*	36	36	36		0: -0.4V, 63: +0.4V
8	VSIZ		V-Size	0-63	*Adj*	0	0	0		0: -15%, 31: 0%, 63: +15%
9	VPOS		V-Position	0-63	*Adj*	31	31	31		0: -0.1V, 31: 0V, 63: +0.1V
10	VLIN		V-Linearity	0-15	*Adj*	7	7	7		0: 85% top enlarged, 7: 100% top normal, 15: 115% top compressed
11	VSCO		S-Correction	0-15	*Adj*	7	7	7		0: 0V added to VD, 15: 100mVpp added to VD
12	VZOM		16:9 CRT Zoom Mode On/Off	0,1	FIX	0	0			0: Zoom Off, 1: Zoom On (top/bottom cut by 25% when ASPECT=31, RGB blanked in this interval)
13	EHT		Vertical Size High Voltage Correction	0-15	FIX	4	4			0: Picture adjusted 0%, 15: Picture Adjusted -5%
14	ASP		Aspect Ration Control 4:3 Mode	0-63	FIX	47	47			0: 75%(16x9 CRT Full), 31: 100%(4x3 CRT Full), 63: 110%
15	ASP1		Aspect Ration Control 16:9 Mode	0-63	FIX	47	47			0: 75%(16x9 CRT Full), 31: 100%(4x3 CRT Full), 63: 110%
16	SCRL		16:9 Vertical Scroll During Zoom	0-63	FIX	31	31			0: Scrolled toward top 32H, 63: Scrolled toward bottom 32H
17	HBSW		H Blanking Switch	0,1	FIX	1	1			0: OFF, 1: ON
18	LBLK		Left Blanking	0-15	FIX	15	15			0: +1.2ms, 7: Center, 15: -1.2ms
19	RBLK		Right Blanking	0-15	FIX	0	0			0: +1.2ms, 7: Center, 15: -1.2ms
20	HDW		H Drive Pulse Width	0,1	FIX	1	1			0: Normal Mode (25ms), 1: Narrow Pulse Width
21	EWDC		EW/DC Display 4x3 on 16x9 CRT	0,1	FIX	0	0			0: OFF, 1: ON
22	LVLN		Picture Bottom Lin Adjust	0-15	*Adj*	0	0			0: 100%, 15: 85% Picture top compressed
23	UVLN		Picture Top Lin Adjust	0-15	*Adj*	0	0			0: 100%, 15: 85% Picture bottom compressed
24	RDRV		Red Drive	0-63	*Adj*	31	31	48	54	0: 1.5Vpp, 63: 3.0Vpp Red Signal Output
25	GDRV		Green Drive	0-63	*Adj*	31	31			0: 1.5Vpp, 63: 3.0Vpp Greem Signal Output
26	BDRV		Blue Drive	0-63	*Adj*	31	31			0: 1.5Vpp, 63: 3.0Vpp Blue Signal Output
27	RCUT		Red Cutoff	0-15	FIX	7	14			0: 3.5mA IK, 7: 13mA IK, 15: 22.7mA IK
28	GCUT		Green Cutoff	0-15	*Adj*	7	7			0: 3.5mA IK, 7: 13mA IK, 15: 22.7mA IK
29	BCUT		Blue Cutoff	0-15	*Adj*	7	7			0: 3.5mA IK, 7: 13mA IK, 15: 22.7mA IK
30	RDR4		Video 4 Red Drive	0-63	*Adj*	31	31	54		0: 1.5Vpp, 63: 3.0Vpp Red Signal Output
31	GDR4		Video 4 Green Drive	0-63	*Adj*	31	31			0: 1.5Vpp, 63: 3.0Vpp Greem Signal Output
32	BDR4		Video 4 Blue Drive	0-63	*Adj*	31	31			0: 1.5Vpp, 63: 3.0Vpp Blue Signal Output
33	RCU4		Video 4 Red Cutoff	0-15	FIX	7	14			0: 3.5mA IK, 7: 13mA IK, 15: 22.7mA IK
34	GCU4		Video 4 Green Cutoff	0-15	*Adj*	7	7			0: 3.5mA IK, 7: 13mA IK, 15: 22.7mA IK
35	BCU4		Video 4 Blue Cutoff	0-15	*Adj*	7	7			0: 3.5mA IK, 7: 13mA IK, 15: 22.7mA IK
36	SBRT		Sub Brightness	0-31	*Adj*	15	adjust to IRE cutoff	adjust to IRE cutoff		Sub Brightness
37	RON		Red Off	0,1	FIX	1	1			0:OFF, 1:ON
38	GON		Green Off	0,1	FIX	1	1			0:OFF, 1:ON
39	BON		Blue Off	0,1	FIX	1	1			0:OFF, 1:ON
40	AXPL		Axis PAL	0,1	FIX	0	0			0: Normal Axis, 1: Forced PAL Asix
41	CBPF		Chroma BPF On/Off	0,1	FIX	1	1			0: BPF OFF, 1: BPF ON
42	COFF		Color On/Off	0,1	FIX	0	0			0: Chroma OFF, 1: Chroma ON
43	TSSP		Sub Sharpness for TV Input	0-15	Fix by model	6	6	5	6	0=-12dB, 7=+3.5dB, 15=+9dB
44	TSPF		Sharpness fo for TV Input	0,1	FIX	1	1			0=2.5MHZ, 1=3.0MHz
45	VSSP		Sub Sharpness for Video Input	0-15	Fix by model	7	7	5	7	0=-12dB, 7=+3.5dB, 15=+9dB
46	VSPF		Sharpness fo for Video Input	0,1	FIX	1	1			0=2.5MHZ, 1=3.0MHz
47	YSSP		Sub Sharpness for YUV Input	0-15	Fix by model	7	7	6	7	0=-12dB, 7=+3.5dB, 15=+9dB

Downloaded from www.Manualslib.com manuals search engine

ADJUSTMENT ITEMS (2 OF 6)

	Register Name		Description	Data Range	Adj/Fix	Initial Data	32" FV	36"/38" FS	36"/38" FV	Comments
48	YSPF	VP CXA2131AS	Sharpness fo for YUV Input	0,1	FIX	1		1		0=2.5MHZ, 1=3.0MHz
49	AXNT		Axis NTSC	0,1	FIX	0		0		0: Japan Axis, 1: US Axis
50	PREL		Pre/Overshoot Ratio	0,1	FIX	1		1		0: 1:1, 1: 2:1
51	DCT		DC Transmission Ratio	0,1	FIX	1		1		0:100%, 1:85%
52	ABLM		ABL Mode	0,1	FIX	1		1		0:Picture ABL, 1:Picture/Brightness ABL
53	FSC		FSC Output On/Off	0,1	FIX	1		1		0: FSC output OFF, 1: FSC output ON
54	HOSC		H VCO Frequency Adjustment	0-15	FIX	12		12		0: Low, 15: High (40 Hz Steps)
55	VSS		Vsync Slice Level	0,1	FIX	0		1		0: 1/3 from sync tip, 1: 1/4 from sync tip
56	HSS		Hsync Slice Level	0,1	FIX	0		1		0: 1/3 from sync tip, 1: 1/4 from sync tip
57	HMSK		Macrovision Countermeasure	0,1	FIX	1		1		0: Off, 1: ON
58	VTMS		Select Signal VTIM Pin	0-3	FIX	0		0		0: V retrace timing, 1: Hsync signal, 2: Vsync signal, 3: don't use
59	AFC		AFC	0-3	FIX	0		0		0: High Gain, 1: Medium Gain, 2: don't use, 3: Extremely low gain
60	REFP		REFP	0,1	FIX	0		0		0: R=20H/G=21H/B=22H, 1: R=23H/G=24H/B=25H
61	VBSW		VBLK Width Control	0-3	FIX	0		0		0: 9H from B, 1: 10H from B, 2: 11H from B, 3:12H from B (When JUMP SW=1)
62	BKOF		ABL Signal Detection Level	0,1	FIX	0		0		0: VTH=3V, 1: VTH=1V
63	AGN2		Aging Mode 2 - Black Output Mode	0,1	FIX	0		0		0: Black Output Mode OFF, 1: Black Output Mode ON
0	SREF	AP BH3868	Surround Effect	0-15	FIX	7		7		0: Min, 15: Max (8-15 LOOP=1)
1	BBLP		BBE Low PAss	0-15	FIX	5		5		0: 0.5dB, 15: 10dB
2	BBHP		BBE High Pass	0-15	FIX	3		3		0: 0.5dB, 15: 10dB
3	SVOL		Sub Volume	0-15	FIX	7		7		0:-0 volume steps, 15:-15 volume steps
4	SBAL		Sub Balance	0-15	FIX	7		7		0: +Right, 15:+Left
5	SBAS		Sub Bass	0-15	Fix by model	5	5	8	5	0:-7 steps, 15: +8 steps
6	STRE		Sub Treble	0-15	Fix by model	3	5	8	5	0:-7 steps, 15: +8 steps
0	SPCA	SRS TDA7464	SRS Space Attenuation	0-63	FIX	0		0		0: 0dB, 63: -31db (1dB steps)
1	CENA		SRS Center Attenuation	0-63	FIX	0		0		0: 0dB, 63: -31db (1dB steps)
2	INPA		Input Attenuation	0-127	FIX	3		3		0: 0dB, 127: -31.5dB (0.5dB steps)
0	COUT	3D COMB uPD64082	Chroma Signal Gain / BPF	0-3	FIX	3		3		Input/Output gain=1 / BPF ON
1	YAPS		Y V-Compensation/Peaking	0-3	FIX	3		3		Correctin enabled for digital/analog inputs
2	NSDS		Standard/Non-Standard Processing	0-3	FIX	0		0		Standard adaptive processing
3	MSS		Inter-frame/Inter-line Mode	0-3	FIX	0		0		Adaptive Processing
4	EXAD		External ADC Insert	0,1	FIX	0		0		Internal Y-ADC
5	PECS		Pedestal Error Correction	0-3	FIX	0		0		Standard
6	EXCS		C sync Input	0-3	FIX	1		1		Use CSI
7	CPP		Y ADC Amplitude/Clamp Method	0-3	FIX	0		0		Y-ADC & C-ADC Vtb=1.25V
8	HDP		H Phase Fine Adjustment	0-7	FIX	3		3		Phase +/- 0msec
9	CDL		C Output Delay Fine Adjustment	0-7	FIX	5		5		Y/C Delay +/- 0msec
10	DYCO		Y Moving Coring Level	0-15	FIX	2		2		0: Close to moving pictures, 15: Close to still pictures
11	DYGA		Y Moving Coring Gain	0-15	FIX	10		10		0: Close to still Pictures, 15: Close to moving Pictures
12	DCCO		C Moving Coring Level	0-15	FIX	2		2		0: Close to moving pictures, 15: Close to still pictures
13	DCGA		C Moving Coring Gain	0-15	FIX	9		9		0: Close to still Pictures, 15: Close to moving Pictures
14	YNRK		YNR Non-linear Filter Gain	0,1	FIX	1		1		x7/8 large noise reduction and large after image
15	YNRI		YNR Non-linear Filter Convergence	0,1	FIX	0		0		6LSB small noise reduction and small after image
16	YNRL		YNR Non-linear Filter Limit Level	0-3	FIX	1		1		0: YNR Off , 3: 3LSB large noise reduction
17	CNRK		CNR Non-linear Filter Gain	0,1	FIX	1		1		x7/8 large noise reduction and large after image
18	CNRI		CNR Non-linear Filter Convergence	0,1	FIX	0		0		6LSB small noise reduction and small after image
19	CNRL		CNR Non-linear Filter Limit Level	0-3	FIX	1		1		0: CNR OFF , 3: 3LSB large noise reduction
20	ID1O		ID-1 Superimpose Signal	0,1	FIX	0		0		Through, no superimposition
21	ID1W		Specifies bit A1 of Word 0	0,1	FIX	0		0		0: 4x3, 1: 16x9
22	ID1N		Spedifies bit A2 of Word 0	0,1	FIX	0		0		0: normal, 1:letterbox
23	CLK		CLK8 Pin Output	0,1	FIX	1		1		0: Output 8fsc, 1: Output OFF

Downloaded from www.Manualslib.com manuals search engine

	Register Name		Description	Data Range	Adj/Fix	Initial Data	32"	36"/38"		Comments
							FV	FS	FV	
24	ST0S	3D COMB uPD64082	Select ST0 Pin Output Signal	0-3	FIX	1		1		External Y-ADC clamp pulse
25	WSC		Noise Detection Coring	0-3	FIX	1		1		1LSB coring for noise detection circuit
26	VTRH		H-sync Non-Standard Detection Hysteresis	0-3	FIX	1		1		Low hysteresis (2 clock pulses)
27	VTRR		H-sync Non-Standard Detection Sensitivity	0-3	FIX	1		1		Medium sensativity (+/- 8 clock pulses)
28	LDSR		Frame Sync Non-Std Detection Sensativity	0-3	FIX	2		2		Low sensativity (1.5 clock pulses)
29	PWRE		Internal ADC Input Range	0,1	FIX	0		0		Same input range on Y-ADC and C-ADC
30	VAPG		Vertical Aperture Compensation Gain	0-7	FIX	4		4		0: Correction OFF, 7: Max Correction
31	VAPI		Vertical Aperture Comp Convergence	0-31	FIX	12		12		0: Correction OFF, 31: Max Correction
32	TEST		Test Bit	0,1	FIX	0		0		Normal Mode
33	YPFT		Y Peaking Filter Center Frequency	0-3	FIX	3		3		4.22 MHz
34	YPFG		Y Peaking Filter Gain	0-15	FIX	7		6		0: -1 gain, 15: 0.875 gain
35	V1PS		Horizontal Dot Supression Level	0-3	FIX	2		2		Medium suppression
36	VEGS		Vertical Dot Supression Level	0-3	FIX	2		2		Medium supression
37	CC3N		Line Comb C Separation Filter	0,1	FIX	0		0		Narrow bandwidth
38	C0HS		C Signal Delay Time at NR	0,1	FIX	0		0		1H Delay
39	CLPH		Y-ADC Clamp Test Bit	0,1	FIX	0		0		Normal Mode
40	SEL2		DC Detection High Freq Sensativity	0,1	FIX	0		0		Low sensativity, Close to still pictures
41	SEL1		DY detection Low Freq Sensativity	0,1	FIX	0		0		Low sensativity, Close to still pictures
42	YHCO		Y High Freq Coring	0-3	FIX	1		0		Small Amount of coring (+/- 1LSB)
43	YHCG		Y High Freq Coring Gain	0,1	FIX	0		0		Gain = 1
44	OVST		Non Standard Detection Test Bit	0,1	FIX	0		0		Normal Mode
45	CSHD		H/V counter Test Bit	0,1	FIX	0		0		Normal Mode
46	KCTT		H/V counter Test Bit	0-3	FIX	0		0		Normal Mode
47	SHT		Non Standard Detection Test Bits	0,1	FIX	0		0		Normal Mode
48	VCT		H/V counter Test Bit	0,1	FIX	0		0		Normal Mode
49	OTT		H/V counter Test Bit	0,1	FIX	0		0		Normal Mode
50	CL2D		Clock Generator Test Bit	0,1	FIX	1		1		Normal Mode
51	CGGT		Clock Generator Test Bit	0,1	FIX	0		0		Normal Mode
52	CLEB		Clock Generator Test Bit	0,1	FIX	0		0		Normal Mode
53	CGT		Clock Generator Test Bit	0,1	FIX	0		0		Normal Mode
54	HPLL		Horizontal PLL Filter	0,1	FIX	1		1		Quick convergence
55	BPLL		Burst PLL Filter	0,1	FIX	1		1		Quick convergence
56	FSCF		Burst Extraction Gain	0,1	FIX	0		0		High gain
57	PLLF		PLL Loop Gain	0,1	FIX	1		1		High gain, quick convergence
58	KILR		Killer Detection Reference	0-15	FIX	3		3		0: Detection off, 15: High detection sensativity
59	HSSL		Horizontal Sync Slice Level	0-15	FIX	12		12		0: 4LSB, 15: 19LSB
60	VSSL		Vertical Sync Slice Level	0-15	FIX	8		8		0: HSSL + 0LSB, 15: HSSL + 15LSB
61	BGPS		Burst Gate Start Position	0-15	FIX	5		5		0: Hsync center + 2ms, 15: Hsync center +5.75ms
62	BGPW		Internal Burst Gate Pulse Width	0-15	FIX	10		10		0: 0.5ms, 15: 4.25ms
63	ADCL		ADC Clock Delay	0-3	FIX	3		3		0: 0ns, 3: 20.5ns (typical)
64	ADPD		ADC Power Down	0,1	FIX	1		1		Stop ADC when not in use
65	NSDW		Non Standard Detection Test Bit	0,1	FIX	0		0		Normal Mode
66	CNRF		CNR Section Test Bit	0,1	FIX	0		0		Normal Mode
0	SHPR	PIC IMP TA1226N	Controls both DL APACON and SRT	0-127	Fix by Model	52	52	59	52	0: Minimum, 127: Maximum
1	BLAD		Black Area Detect	0-3	FIX	0		0		0: 10IRE, 1: 20IRE, 2: 30IRE, 3: 40IRE
2	SRTS		SRT Start Amplitude	0-3	FIX	3		3		0: 7IRE, 1: 10IRE, 2: 14IRE, 3: 28IRE
3	YNR		Controls YNR ON/OFF	0,1	FIX	1		1		YNR ON
4	GIRE		Gamma Correction Start Point	0-3	FIX	3		3		0: 70IRE, 1: 80IRE, 2: 90IRE, 3: OFF
5	DAC1		1 bit DAC Output	0,1	FIX	0		0		Open
6	DAC2		1 bit DAC Output	0,1	FIX	0		0		Open

Downloaded from www.Manualslib.com manuals search engine

ADJUSTMENT ITEMS (4 OF 6)

	Register Name		Description	Data Range	Adj/Fix	Initial Data	32" FV	36"38" FS	36"38" FV	Comments
7	GCUR	PIC IMP TA1226N	Controls Curve of Gamma Correction	0,1	FIX	0		0		0: -2.4dB, -1.6dB
8	BLKC		Black Conpensation	0,1	FIX	1		1		OFF
9	TEST		Test Bit	0-3	FIX	3		3		Pin 20 Output: 0=RS, 1=SHR, 2=RTC, 3=TEST3
10	RS		Gain of DL APACON at 8MHz Peak	0-7	FIX	0		0		0: 0dB, 7: +6dB
11	RTC		Compensation Ratio of SRT and DL APACON	0-7	FIX	4		4		0: Min, 7: Max
12	VMLO		Gain for Menu VM=LOW	0-2	FIX	1		1		0=off, 1=-6dB, 2=-3dB, 3=0dB
0	PIPH	PIP SDA9588X	PIP H-position	0-127	FIX	34		36		0:Right, 127:Left
1	PIPV		PIP V-position	0-63	FIX	22		22		0:Up, 63:Down
2	POFV		Position Ofset Vertical	0-15	FIX	4		4		Vertical PiP Offset from Center
3	POFH		Position Ofset Horizontal	0-31	FIX	17		18		Horizontal PiP Offset from Center
4	VACQ		PiP V-Acquisition Window	0-15	FIX	8		8		0: -8 lines up, 8: Center, 15: +7 pixels down
5	HACQ		PiP H-Acquisition Window	0-15	FIX	8		8		0: -16 pixels right, 8: Center, 15: +14 pixels left
6	PVID		PiP Vsync Delay	0-31	FIX	0		0		Step size 3.56ms< 1 step < 6.4ms
7	VERB		Vertical Blanking	0,1	FIX	0		0		0: DAC Blanking during line blanking interval, 1: DAC Blanking during line AND field intervals
8	PSEL		SELDOWN Bit Control	0,1	FIX	1		1		0:Open out, 1:TTL out
9	SELD		Select PYS Delay	0-15	FIX	8		8		0: -8 clock cycles, 8: NO delay, 15: +7 clock cycles
10	4SLD		Select PYS Delay YUV Input	0-15	FIX	8		8		0: -8 clock cycles, 8: NO delay, 15: +7 clock cycles
11	PCOR		Position Correction	0,1	FIX	1		1		0: OFF, 1: ON (Position correction during varying parent frequency)
12	AGCR		AGC Gain Control Reset	0,1	FIX	1		1		0: Normal, 1: Reset (transition of 0-->1 resets AGC)
13	AGCM		AGC Mode	0-3	FIX	0		3		0: Sync height & ADC Overflow, 1: sync height, 2: ADC overflow, 3: AGC Fixed
14	AGCV		ADC Value	0-15	FIX	11		12		0: Input valtage 0.5Vpp, 15: Input Voltage is 1.5Vpp
15	CLMD		Clamp Pulse Duration	0-3	FIX	0		0		0: 0.5ms, 1: 0.9ms, 2: 1.2ms, 3: 1.5ms
16	CLMS		Clamp Pulse Start	0-3	FIX	2		2		0: 1.0ms, 1: 1.5ms, 2: 2.0ms, 3: 2.5ms
17	LMOF		Luminance Offset	0-3	FIX	3		3		0: NO OFFSET, 1: +16LSB, 2: -8LSB, 3: -16LSB
18	PYDL		Y/C Delay	0-15	FIX	8		2		0: -8 pixels, 15: +7 pixels
19	FRMY		Frame Y Level	0-15	Fix by Model	6	4	5		Adjusts 4 MSB of Frame Y Signal
20	FRSL		Frame Type Select	0,1	FIX	1		1		0: Normal frame, 1: 3D frame
21	FRWH		Frame Width Horizontal	0-7	FIX	4		4		0: No frame, 7: 7 pixels
22	FRWV		Frame Width Vertical	0-3	FIX	1		1		0: No frame, 3: 3 lines
23	PBSW		PiP Block Selection (PIPBG vs PIPBLK)	0,1	FIX	0		1		Blocking Type: 0= PIPBG(gray), 1=PIPBLK(black)
0	CKIL	PIP-YC SDA9588X	Color Killer Threshold	0-3	FIX	0		0		0: -30dB, 1: -18dB, 2: -24dB, 3: color always off
1	COLO		Color Killer Off	0,1	FIX	0		0		0: Color killer active, 1: Color always on
2	PSHU		PiP Sub Hue	0-15	FIX	7		7		PiP sub hue
3	4PSU		PiP Sub Hue YUV Input	0-15	FIX	7		7		PiP sub hue
4	CPLL		Chroma PLL Off	0,1	FIX	0		0		0: Chroma PLL active, 1: Chroma PLL free running
5	SCAD		Sub Carrier Freq Fine Adjustment	0-31	FIX	6		6		0: -150 PPM, 7: default, 31: +310 PPM
6	PCON		PiP Contrast	0-15	FIX	0		0		0: nominal, 15: +30% increase
7	4PCN		PiP Contrast YUV Input	0-15	FIX	0		0		0: nominal, 15: +30% increase
8	PBRT		PiP Brightness	0-15	FIX	2		2		0: nominal, 15: +20% increase
9	4PBR		PiP Brightness YUV Input	0-15	FIX	2		2		0: nominal, 15: +20% increase
10	IPER		V Pedestal	0-15	FIX	0		0		0: nominal, 15: +15LSB offset
11	4IPR		V Pedestal YUV Input	0-15	FIX	4		0		0: nominal, 15: +15LSB offset
12	IPEG		Y Pedestal	0-15	FIX	0		0		0: nominal, 15: +15LSB offset
13	4IPG		Y Pedestal YUV Input	0-15	FIX	0		0		0: nominal, 15: +15LSB offset
14	IPEB		U Pedestal	0-15	FIX	1		1		0: nominal, 15: +15LSB offset
15	4IPB		U Pedestal YUV Input	0-15	FIX	1		1		0: nominal, 15: +15LSB offset
16	BLKR		Invert V Pedestal	0,1	FIX	1		0		0: Offset add during blanking, 1: Offset add during active
17	BLKB		Invert U Pedestal	0,1	FIX	0		1		0: Offset add during blanking, 1: Offset add during active
18	PVGA		Peak Level V Output	0-255	FIX	84		84		0: 0.3Vpp, 192: 1.0Vpp, 255: 1.2Vpp
19	4PVG		Peak Level V Output YUV Input	0-255	FIX	69		69		0: 0.3Vpp, 192: 1.0Vpp, 255: 1.2Vpp

Downloaded from www.Manualslib.com manuals search engine

	Register Name		Description	Data Range	Adj/Fix	Initial Data	32" FV	36"/38" FS	36"/38" FV	Comments
20	PUGA	PIP-YC SDA9588X	Peak Level U Output	0-255	FIX	52	52			0: 0.3Vpp, 192: 1.0Vpp, 255: 1.2Vpp
21	4PUG		Peak Level U Output YUV Input	0-255	FIX	36	36			0: 0.3Vpp, 192: 1.0Vpp, 255: 1.2Vpp
22	PYGA		Peak Level Y Output	0-255	Fix by Model	104	25	35		0: 0.3Vpp, 192: 1.0Vpp, 255: 1.2Vpp
23	4PYG		Peak Level Y Output YUV Input	0-255	Fix by Model	129	27	37		0: 0.3Vpp, 192: 1.0Vpp, 255: 1.2Vpp
24	CHRO		UV Output Polarity	0,1	FIX	0	0			0: +U/+V output, 1: -U/-V output
25	SATA		Color Saturation Adjustment	0-15	FIX	8	9			0: No color, 8: nominal saturation, 15: nominal x 1.875
26	YPKG		Y Peaking Adjustment	0-7	FIX	7	7			0: No peaking, 7: Strongest Peaking
27	4YPK		Y Peaking Adjustment YUV Input	0-7	FIX	7	7			0: No peaking, 7: Strongest Peaking
28	YCOR		Y Coring Enable	0,1	FIX	1	1			0: OFF, 1: ON
29	CLPL		Clamp Pulse Length	0-3	FIX	0	0			0=5ms, 1=3.75ms, 2=2.5ms, 3=1.25ms
0	RTCO	DAC CXA1315	Rotation Coil	0-63	FIX	31	31			Rotation coil adjustment for nominal value
1	T2CO		Sub Color TV Input	0-7	*Adj*	120	120	111	106	TV Sub Color Adjustment (CXA2039 YUV Models AT DAC)
2	V2CO		Sub Color Video Input	0-7	*Adj*	120	120	122	114	VIDEO1-3 Sub Color Adjustment (CXA2039 YUV Models at DAC)
3	4COL		Sub Color YUV Input	0-7	*Adj*	120	120	117		YUV Sub Color Adjustment (CXA2039 YUV Models at DAC)
4	T2HU		Sub Hue TV Input	0-7	*Adj*	15	15	16		TV Sub HUE Adjustment (CXA2039 YUV Models at DAC)
5	V2HU		Sub Hue Video Input	0-7	*Adj*	15	15	18		VIDEO1-3 Sub HUE Adjustment (CXA2039 YUV Models at DAC)
6	4SHU		Sub Hue YUV Input	0-7	*Adj*	15	15	16		YUV Sub HUE Adjustment (CXA2039 YUV Models at DAC)
0	XJGL	ID1 CXD2085	Decoding Result Held For VCR Scanning	0,1	FIX	0	0			Hold data during VCR variable speed playback
1	LNJ1		ID-1 Signal Location	0,1	FIX	0	0			Search for ID-1 data +/- one line in VBI
0	DUM1	CCD	CCD Dummy Register							Used to display CC data in Service Mode
1	VOSD		VChip OSD Test Register	0,1	FIX	0	0			Used to display VChip data in Service Mode
0	DISP	OP M306V5	OSD Position	0-63	*Adj*	15	15			OSD horizontal position
1	RAMW		OSD RAM Window	0,1	FIX	0	0			
2	ICMP		OSD Non-interlace Threshold	0-15	FIX	4	4			0: 0 fields, 15: 15 fields
3	IPOR		OSD Non-interlace Even/Odd Display	0-3	Fix	1	1			0=Even OSD display, 1= Odd OSD display, 2&3=N/A
4	FAWD		Factory AutoWide Mode	0,1	Fix	0	0			0= No Autowide in RF mode, 1= Autowide in RF Mode
5	TILT		Tilt Correction Spec	0,1	Fix	0	2			0= New Tilt Spec for AA2U (less VANG offset), 1= AA2W/AA2H Tilt Spec
		PROGRAM PALETTE	PROGRAM FOR EACH PALETTE MODE →				VIVID	STD	MOVIE	SPORTS
0	VPIC		Set Current Program Pallette PICTURE Reset Level	0-63	FIX by Palette	50	63	50	38	63
1	VBRT		Set Current Program Pallette BRIGHTNESS Reset Level	0-63	FIX by Palette	31	31	31	31	31
2	VCOL		Set Current Program Pallette COLOR Reset Level	0-63	FIX by Palette	31	38	31	31	38
3	VSHP		Set Current Program Pallette SHARPNESS Reset Level	0-63	FIX by Palette	31	31	31	31	31
4	VVM		Set Current Program Pallette VM Reset Level	0-3	FIX by Palette	1	2	1	0	2
5	VTRI		Set Current Program Pallette Color Temp Reset Setting	0-3	FIX by Palette	1	0	1	2	0
6	VGMA		Set Current Program Pallette YC/J GAMMA	0-3	FIX by Palette	2	3	2	2	2
7	VBLK		Set Current Program Pallette Black Stretch	0,1	FIX by Palette	1	1	1	1	1
8	VAPA		Set Current Program Palette APACON	0,1	FIX by Palette	1	0	1	1	1
9	VSRT		Set Current Program Pallette SRT	0,1	FIX by Palette	0	1	0	0	0
10	VNRM		Set Current Program Pallette NRMD	0,1	FIX by Palette	0	0	0	0	1

Downloaded from www.Manualslib.com manuals search engine

ADJUSTMENT ITEMS (6 OF 6)

	Register Name		Description	Data Range	Adj/Fix	Initial Data	32" FV	36"/38" FS	36"/38" FV	Comments
0	RDOF	WARM COLOR TEMP OFFSET	Red Drive offset for WARM	0-63	FIX	0	0			Red Drive MOVIE=RDRV(RDR4)-RDOF
1	GDOF		Green Drive offset for WARM	0-63	FIX	4	4			Green Drive MOVIE=GDRV(GDR4)-GDOF
2	BDOF		Blue Drive offset for WARM	0-63	FIX	15	15			Blue Drive MOVIE=BDRV(BDR4)-BDOF
3	RCOF		Red Cutoff offset for WARM	0-31	FIX	0	0			Red Cutoff MOVIE=RCUT(RCU4)-RCOF
4	GCOF		Green Cutoff offset for WARM	0-31	FIX	2	2			GREEN Cutoff MOVIE=GCUT(GCU4-GCOF)
5	BCOF		Blue Cutoff offset for WARM	0-31	FIX	7	7			BLUE Cutoff MOVIE=BCUT(BCU4)-BCOF
6	DCOF		Dynamic Color setting for WARM	0,1	FIX	0	0			0=OFF, 1=ON
0	ID-0	ID MAP	ID-0 (Language/Color Systems)	0-255	Fix by model	89		refer to NVM ID Chart		See ID map
1	ID-1		ID-1 (Input/Output Conifguration)	0-255	Fix by model	63				See ID map
2	ID-2		ID-2 (Audio)	0-255	Fix by model	239				See ID map
3	ID-3		ID-3 (OSD/Timer/V-chip/Ch Fix)	0-255	Fix by model	99				See ID map
4	ID-4		ID-4 (CC/Spot Killer/etc)	0-255	Fix by model	139				See ID map
5	ID-5		ID-5 (V-series Features/etc)	0-255	Fix by model	181				See ID map
6	ID-6		ID-6 (PiP/Ant Sw related)	0-255	Fix by model	6				See ID map
7	ID-7		ID-7 (Special Models/etc)	0-255	Fix by model	24				See ID map

VALUE = Not Used for AA-2U

VALUE = Fixed Item For AA-2U

4-5. FEATURE ID MAP

```
ID      7     24    SERVICE
ID7           TV    00011000




M306V5ME-1015P      NVM:G
VERSION: 1.0__
```

Note: Check to be sure NVM is good (NVM: G)

Model	Destination	ID-0	ID-1	ID-2	ID-3	ID-4	ID-5	ID-6	ID-7
KV-32FV27	US	89	63	239	99	139	177	6	24
KV-32FV27	CND	89	63	239	83	139	177	6	24
KV-36FS13	US	89	31	95	99	139	177	0	17
KV-36FS13	CND	89	31	95	83	139	177	0	17
KV-36FS13	HAWAII	89	31	95	99	139	177	0	17
KV-36FS17	US	89	31	95	99	139	177	6	17
KV-36FS17	HAWAII	89	31	95	99	139	177	6	17
KV-36FV27	US	89	63	239	99	139	177	6	24
KV-36FV27	CND	89	63	239	83	139	177	6	24
KV-36FV27	HAWAII	89	63	239	99	139	177	6	24
KV-38FS17	E	25	31	95	195	155	177	6	81

4-6. PROGRAM PALETTE SETTINGS

		Vivid	Standard	Movie	Sports
Picture	(VPIC)	63	50	38	63
Brightnness	(VBRT)	31	31	31	31
Color	(VCOL)	38	31	31	38
Sharpness	(VSHP)	31	31	31	31
VM[1)]	(VVM)	2	1	0	2
C Temp[1)]	(VTRI)	2	1	0	2
Gamma	(VGMA)	3	2	2	2
Blk Comp	(VBLK)	1	1	1	1
V Apa Comp	(VAPA)	0	1	1	1
SRT ON/OFF	(VSRT)	1	0	0	0
NRMD	(VNRM)	0	0	0	1

[1)] Setting of 3 is invalid for these registers

Downloaded from www.Manualslib.com manuals search engine

TO PROGRAM PROGRAM PALETTE RESET LEVELS

1. Switch to Program Palette to edit.
2. Enter Service Mode.
3. Set desired values for current Program Palette settings.
4. Write into memory by pressing [MUTING] then [ENTER].
5. Repeat steps 1-4 for each palette.

Example
To Set RESET Level of Standard Mode to 60%
1. Switch to STANDARD Palette.
2. Enter Service Mode.
3. Change value of VPIC to 38 (38/63 = 60%)
4. Write into memory by pressing [MUTING] then [ENTER] .
5. Enter Video Menu and press [RESET] .
6. Reset level of picture for STANDARD PALETTE ONLY is now 38 steps.

4-7. A BOARD ADJUSTMENTS

SUB CONTRAST ADJUSTMENT (RDRV, RDR4)

1. Input a 75% color-bar signal.
2. Set to: VIDEO mode = Standard, COLOR = Minimum, PICTURE = 100%, GON = 0 (OFF), BON = 0 (OFF)
3. Set to Service Adjustment Mode and connect an oscilloscope to pin ① of CN351 on the A Board.
4. Set RDRV with [1] and [4] .
5. Adjust with [3] and [6] for: 1.85 ± 0.05 Vp-p (KV-32FV27 ONLY), 1.95 ± 0.05 Vp-p (ALL EXCEPT KV-32FV27).
6. Write into memory by pressing [MUTING] then [ENTER] .
7. Repeat steps 1-6 for RDR4 using Video 4 input.

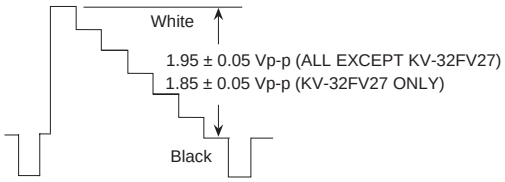

SUB BRIGHT ADJUSTMENT (SBRT)

1. Set to Service Adjustment Mode.
2. Input a gray scale pattern signal.
3. Set the PICTURE to minimum, and BRIGHT to normal.
4. Select SBRT with [1] and [4] .
5. Adjust SUB BRIGHT level with [3] and [5] so that the stripe second from the right is faintly visible.
6. Write into the memory by pressing [MUTING] then [ENTER].

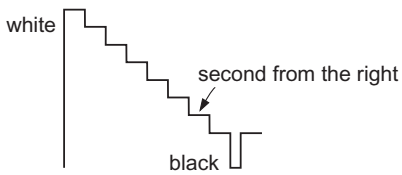

SUB HUE, SUB COLOR ADJUSTMENT (T2HU, T2CO, V2HU, V2CO, 4SHU, 4COL)

Note: T2HU and T2CO are for Tuner inputs.
V2HU and V2CO are for all other Video inputs.
4SHU and 4COL are for Video 4 input.

1. Input a 75% color-bar signal.
2. Set to Service Adjustment Mode and set: VIDEO mode = Standard, PICTURE = 100%, COLOR = 50%, HUE = 50%.
3. Connect an oscilloscope to Pin ③ of CN351 on the A Board.
4. Select T2HU and T2CO with [1] and [4] .
5. Adjust with [3] and [6] for a flat ± 50mV.
6. Write into memory by [MUTING] then [ENTER] .
7. Repeat steps 1-6 for V2HU & V2C0 and 4SHU & 4COL.

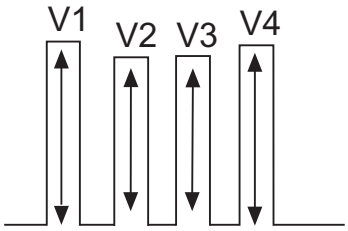

V. SIZE ADJUSTMENT (VSIZ)

1. Input a cross-hatch signal.
2. Set to Service Adjustment Mode.
3. Select VSIZ with [1] and [4].
4. Adjust with [3] and [6] for the best vertical size.
5. Write into the memory by pressing [MUTING] then [ENTER].

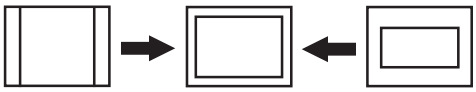

V. POSITION ADJUSTMENT (VPOS)

1. Input a cross-hatch signal.
2. Set to Service Adjustment Mode.
3. Select VPOS with [1] and [4] .
4. Adjust with [3] and [6] for the best vertical center.
5. Write into the memory by pressing [MUTING] then [ENTER].

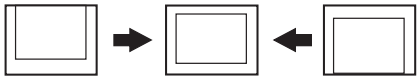

Downloaded from www.Manualslib.com manuals search engine

H. SIZE ADJUSTMENT (HSIZ)

1. Input a monoscope signal.
2. Set to Service Adjustment Mode.
3. Select HSIZ with 1 and 4 .
4. Adjust with 3 and 6 for the best vertical size.
5. Write into the memory by pressing MUTING then ENTER.

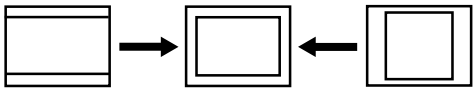

H. POSITION ADJUSTMENT (HPOS)

HPOS Range is from 0~15.

1. Input a monoscope signal.
2. Set the Service Adjustment Mode.
3. Select HPOS with 1 and 4 .
4. Adjust with 3 and 6 for the best horizontal center.
5. Write into the memory by pressing MUTING then ENTER.

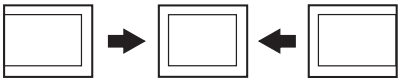

V LINEARITY (VLIN), V CORRECTION (VSCO), PIN AMP (PAMP) AND PIN PHASE (PPHA) ADJUSTMENTS

1. Input a cross-hatch signal.
2. Set to Service Adjustment Mode.
3. Select VLIN, VSCO, PAMP, and PPHA with 1 and 4 .
4. Adjust with 3 and 6 for the best picture.
5. Write the memory by pressing MUTING then ENTER .

V LINEARITY(VLIN)

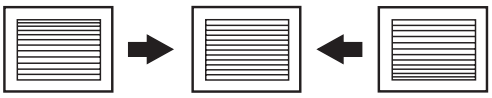

VS CORRECTION (VSCO)

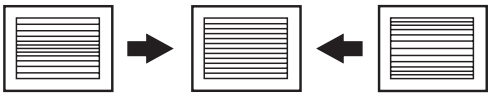

PIN AMP (PAMP)

PIN PHASE (PPHA)

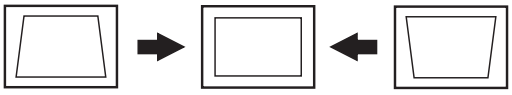

V ANGLE (VANG), V BOW (VBOW), UPPER PIN (UPIN) AND LOW PIN (LPIN) ADJUSTMENTS

1. Input a monoscope signal.
2. Set to Service Adjustment Mode.
3. Select VANG, VBOW, UPIN, and LPIN with 1 and 4 .
4. Adjust with 3 and 6 for the best picture.
5. Write the memory by pressing MUTING then ENTER .

V ANGLE (VANG)

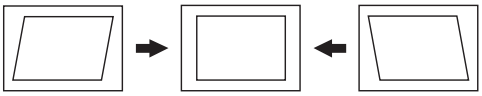

V BOW (VBOW)

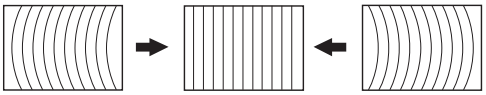

UPPER PIN (UPIN)

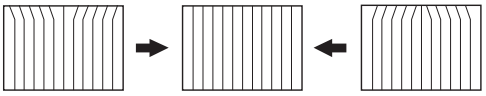

LOW PIN (LPIN)

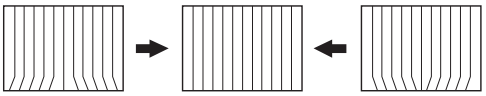

OSD POSITION ADJUSTMENT (DISP)

1. Input a color-bar signal.
2. Set to Service Adjustment Mode.
3. Select DISP with 1 and 4.
4. Adjust with 3 and 6 for adjustment of characters to center.
5. Write the memory by pressing MUTING then ENTER .

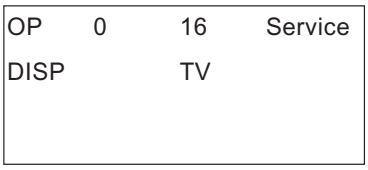

Downloaded from www.Manualslib.com manuals search engine

ROTATION COIL ADJUSTMENT

1. Input a monoscope signal.
2. Push the Menu button on the Remote.
3. Select the “Set-up” mode.
4. Select “Tilt Correction”. Confirm that number (0) color changes to red.
5. Push ↑ (+) on the Remote. Confirm that the number increases up to +5 and the picture rotates clockwise.
6. Push ↓ (-) on the Remote. Confirm that the number decreases down to -5 and the picture rotates counter-clockwise.
7. Push ↑ (+) on the Remote. Return the value to 0.

SET-UP

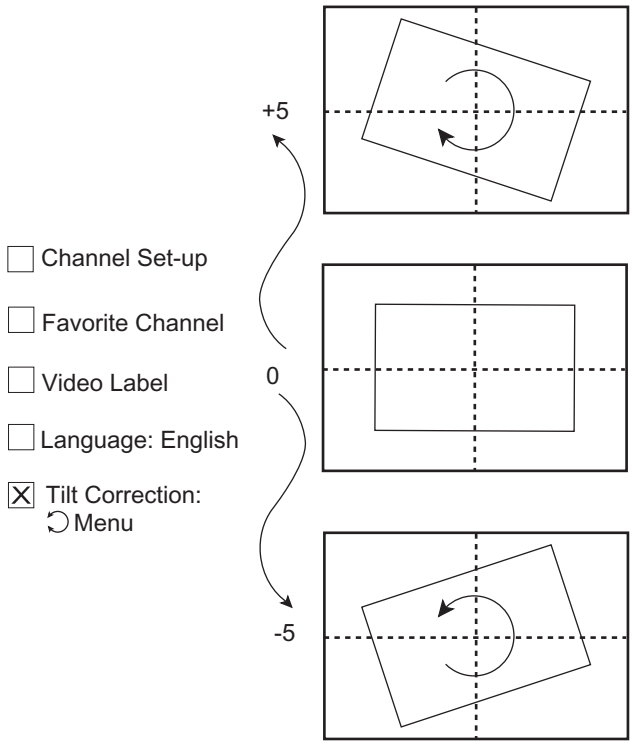

Downloaded from www.Manualslib.com manuals search engine

SECTION 5: DIAGRAMS

5-1. CIRCUIT BOARDS LOCATION

KV-36FS13/36FS17/38FS17 ONLY

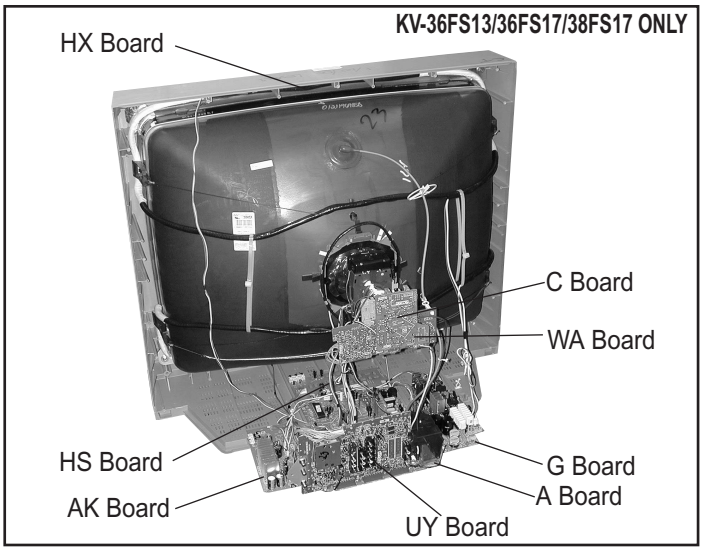

KV-32FV27/36FV27 ONLY

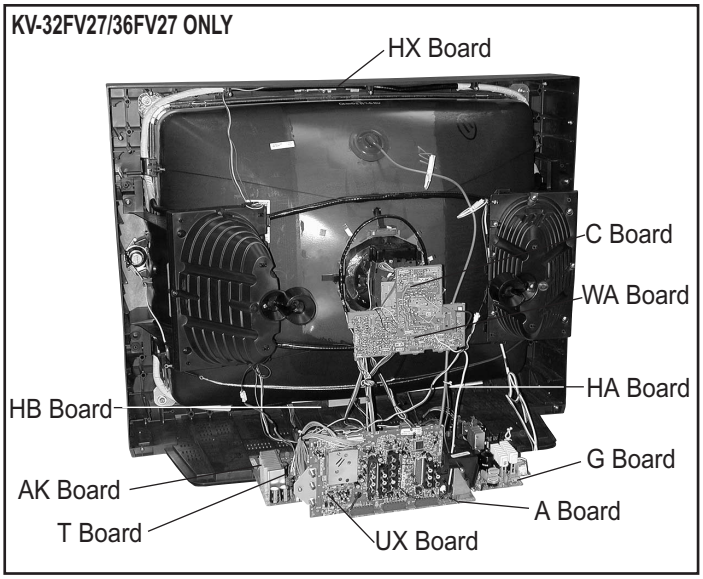

5-2. PRINTED WIRING BOARDS AND SCHEMATIC DIAGRAMS INFORMATION

All capacitors are in µF unless otherwise noted. pF : µµF 50WV or less are not indicated except for electrolytics and tantalums.

All electrolytics are in 50V unless otherwise specified.

All resistors are in ohms. K=1000, M=1000k

Indication of resistance, which does not have one for rating electrical power, is as follows:

Pitch : 5mm

Rating electrical power : $^1/_4$ W

$^1/_4$ W in resistance, $^1/_{10}$ W and $^1/_8$ W in chip resistance.

: nonflammable resistor.

: fusible resistor.

△ : internal component.

: panel designation and adjustment for repair.

All variable and adjustable resistors have characteristic curve B, unless otherwise noted.

Readings are taken with a color-bar signal input.

Readings are taken with a 10M digital multimeter.

Voltages are DC with respect to ground unless otherwise noted.

Voltage variations may be noted due to normal production tolerances.

All voltages are in V.

S : Measurement impossibility.

: B+line.

: B-line. (Actual measured value may be different).

: signal path. (RF)

Circled numbers are waveform references.

The components identified by ⋈ in this basic schematic diagram have been carefully factory-selected for each set in order to satisfy regulations regarding X-ray radiation. Should replacement be necessary, replace only with the value originally used.

When replacing components identified by ◪, make the necessary adjustments as indicated. If the results do not meet the specified value, change the component identified by ⋈ and repeat the adjustment until the specified value is achieved. (Refer to Safety Related Adjustments on Page 14.)

When replacing the parts listed in the table below, it is important to perform the related adjustments.

Part Replaced (◪)	Adjustment (⋈)
R387, R550, R529, R530, R531, R532, R533, D519, D520, D521, IC501, C531, C532, T503, IC351, Q301, R356, R359, R361, D302.....A Board IC643, R661.....G Board	HV HOLD-DOWN R530,R531

REFERENCE INFORMATION

RESISTOR	**: RN**	**METAL FILM**
	: RC	**SOLID**
	: FPRD	**NONFLAMMABLE CARBON**
	: FUSE	**NONFLAMMABLE FUSIBLE**
	: RW	**NONFLAMMABLE WIREWOUND**
	: RS	**NONFLAMMABLE METAL OXIDE**
	: RB	**NONFLAMMABLE CEMENT**
	: ※	**ADJUSTMENT RESISTOR**
COIL	**: LF-8L**	**MICRO INDUCTOR**
CAPACITOR	**: TA**	**TANTALUM**
	: PS	**STYROL**
	: PP	**POLYPROPYLENE**
	: PT	**MYLAR**
	: MPS	**METALIZED POLYESTER**
	: MPP	**METALIZED POLYPROPYLENE**
	: ALB	**BIPOLAR**
	: ALT	**HIGH TEMPERATURE**
	: ALR	**HIGH RIPPLE**

The components identified by shading and ⚠ symbol are critical for safety. Replace only with part number specified.

The symbol indicates a fast operating fuse and is displayed on the component side of the board. Replace only with fuse of the same rating as marked.

Les composants identifies par un trame et une marque ⚠ sont critiques pour la securite. Ne les remplacer que par une piece portant le numero specifie.

Le symbole indique une fusible a action rapide. Doit etre remplace par une fusible de meme valeur, comme maque.

Downloaded from www.Manualslib.com manuals search engine

BLOCK DIAGRAM (1 OF 6) (KV-36FS13 / 36FS17/ 38FS17 ONLY)

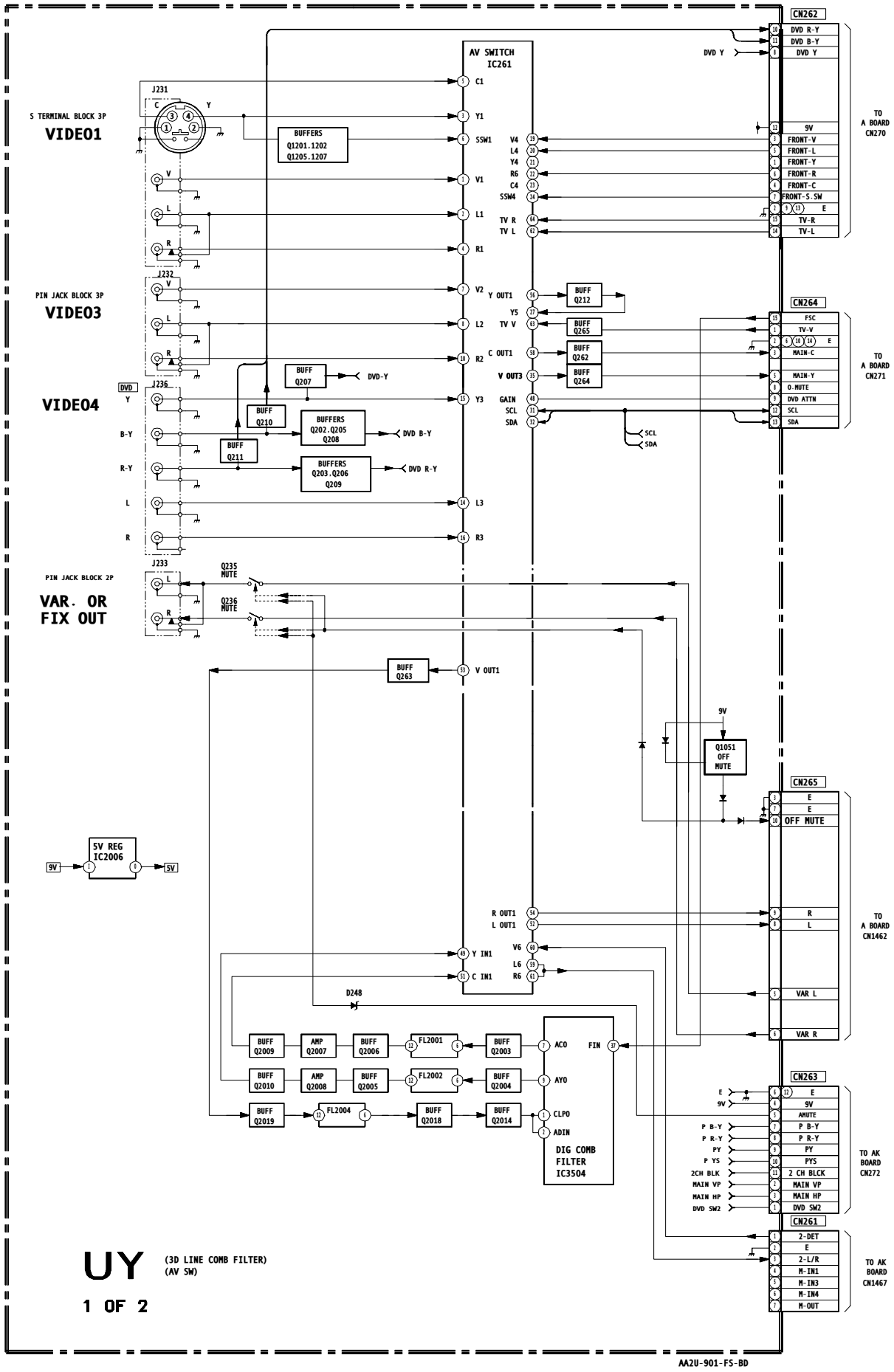

Downloaded from www.Manualslib.com manuals search engine

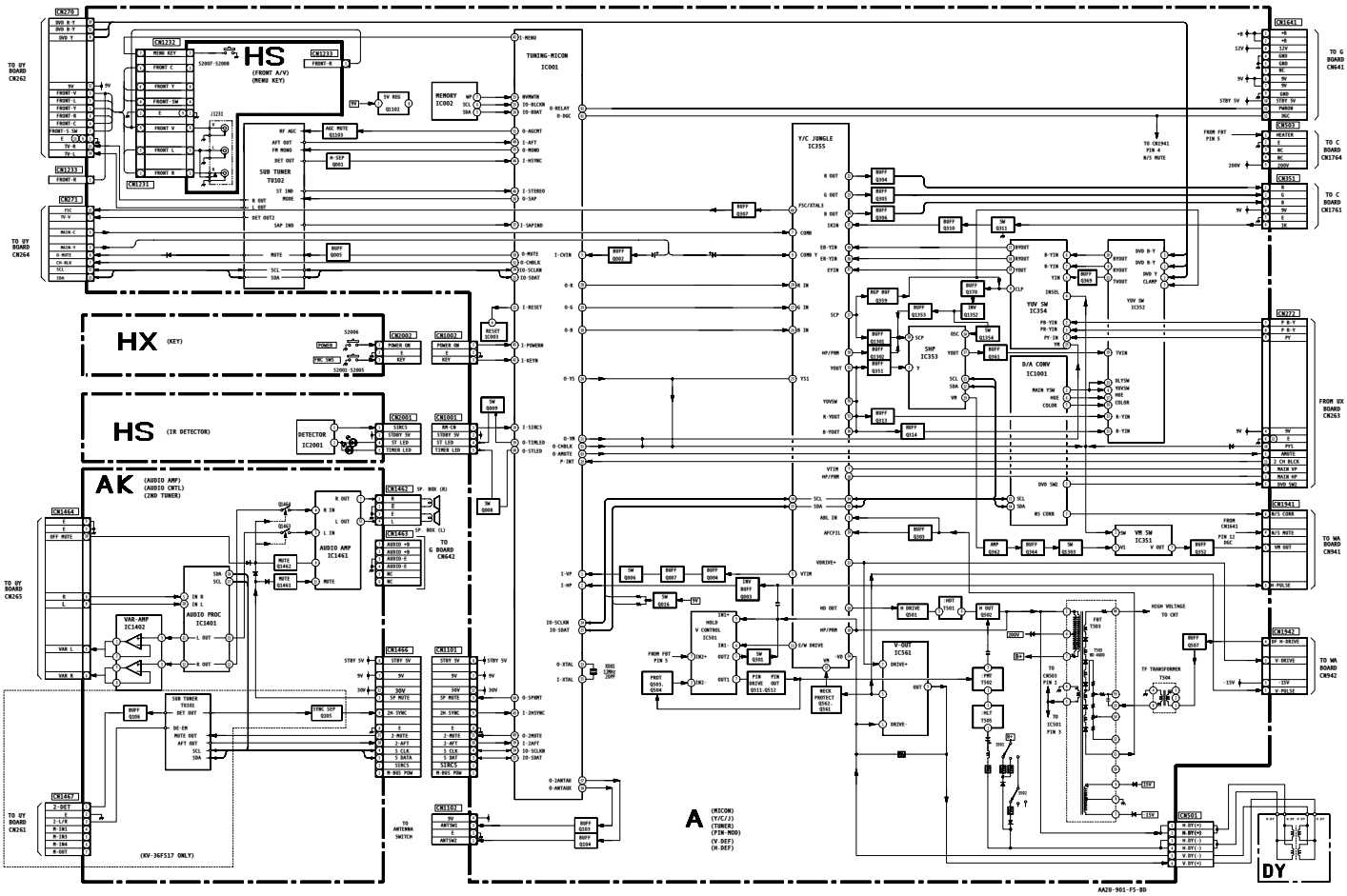

Downloaded from www.Manualslib.com manuals search engine

BLOCK DIAGRAM (3 OF 6) (KV-36FS13 / 36FS17 / 38FS17 ONLY)

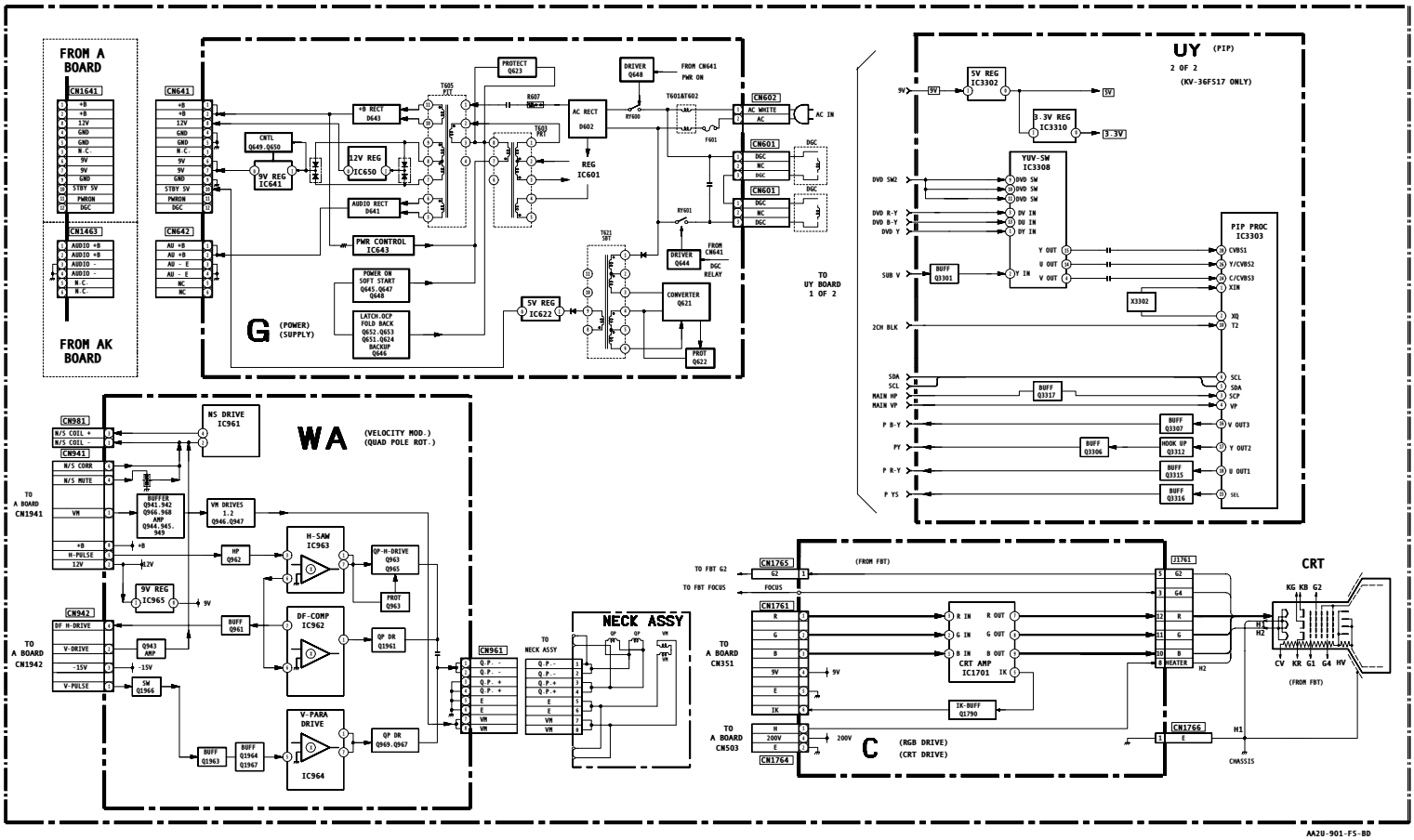

Downloaded from www.Manualslib.com manuals search engine

BLOCK DIAGRAM (4 OF 6) (KV-32FV27 / 36FV27 ONLY)

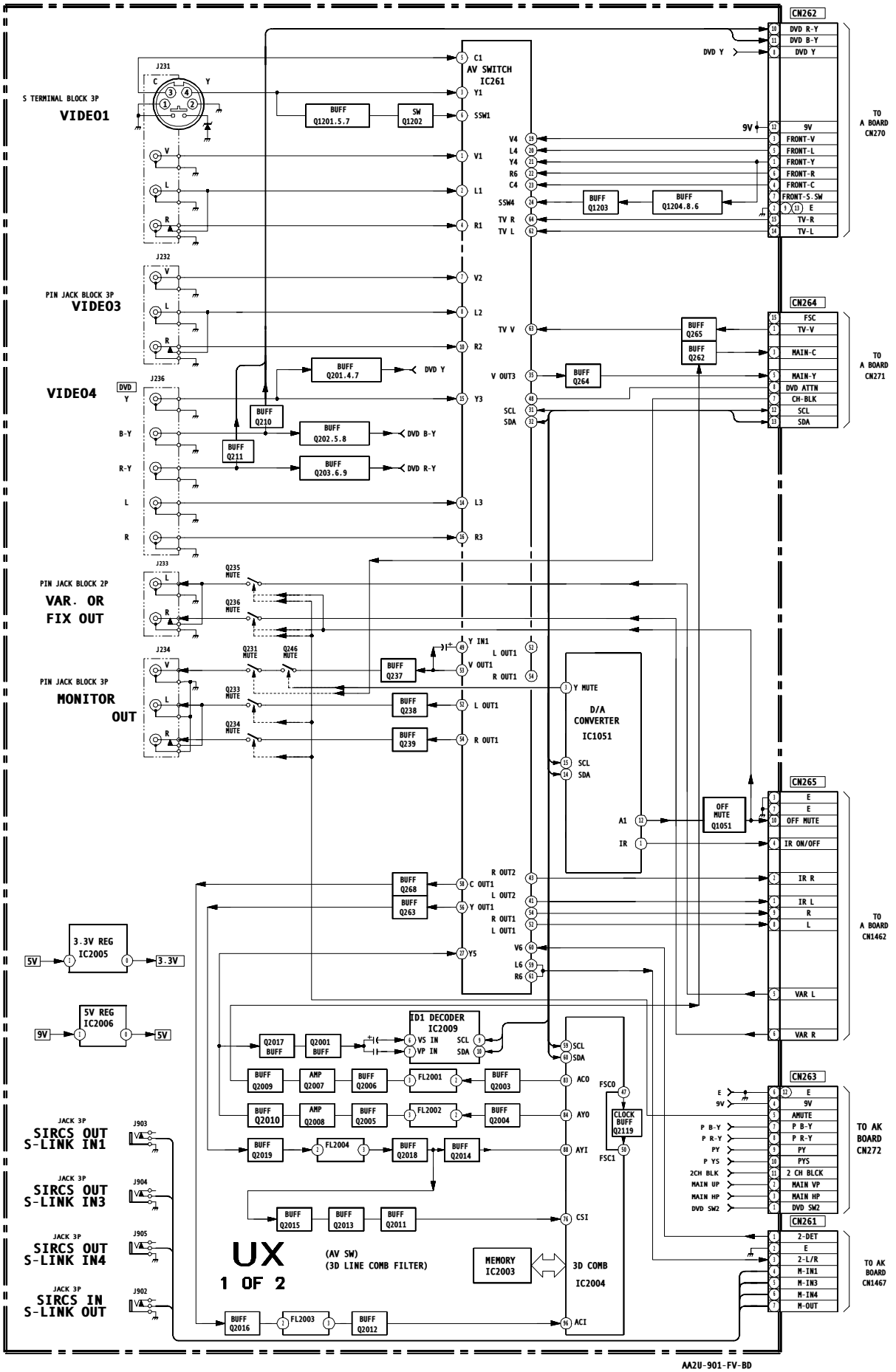

Downloaded from www.Manualslib.com manuals search engine

BLOCK DIAGRAM (5 OF 6) (KV-32FV27 / 36FV27 ONLY)

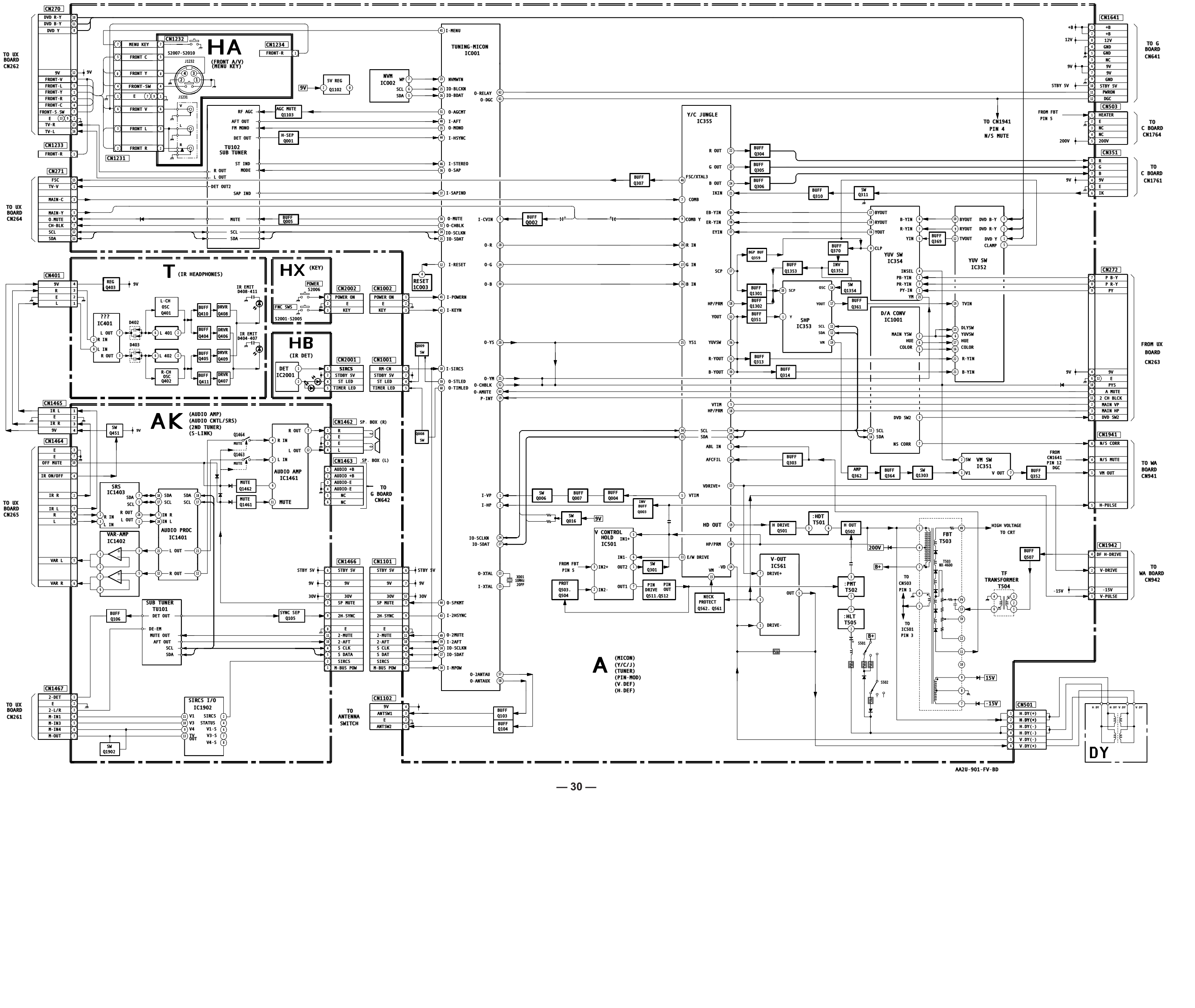

Downloaded from www.Manualslib.com manuals search engine

BLOCK DIAGRAM (6 OF 6) (KV-32FV27 / 36FV27 ONLY)

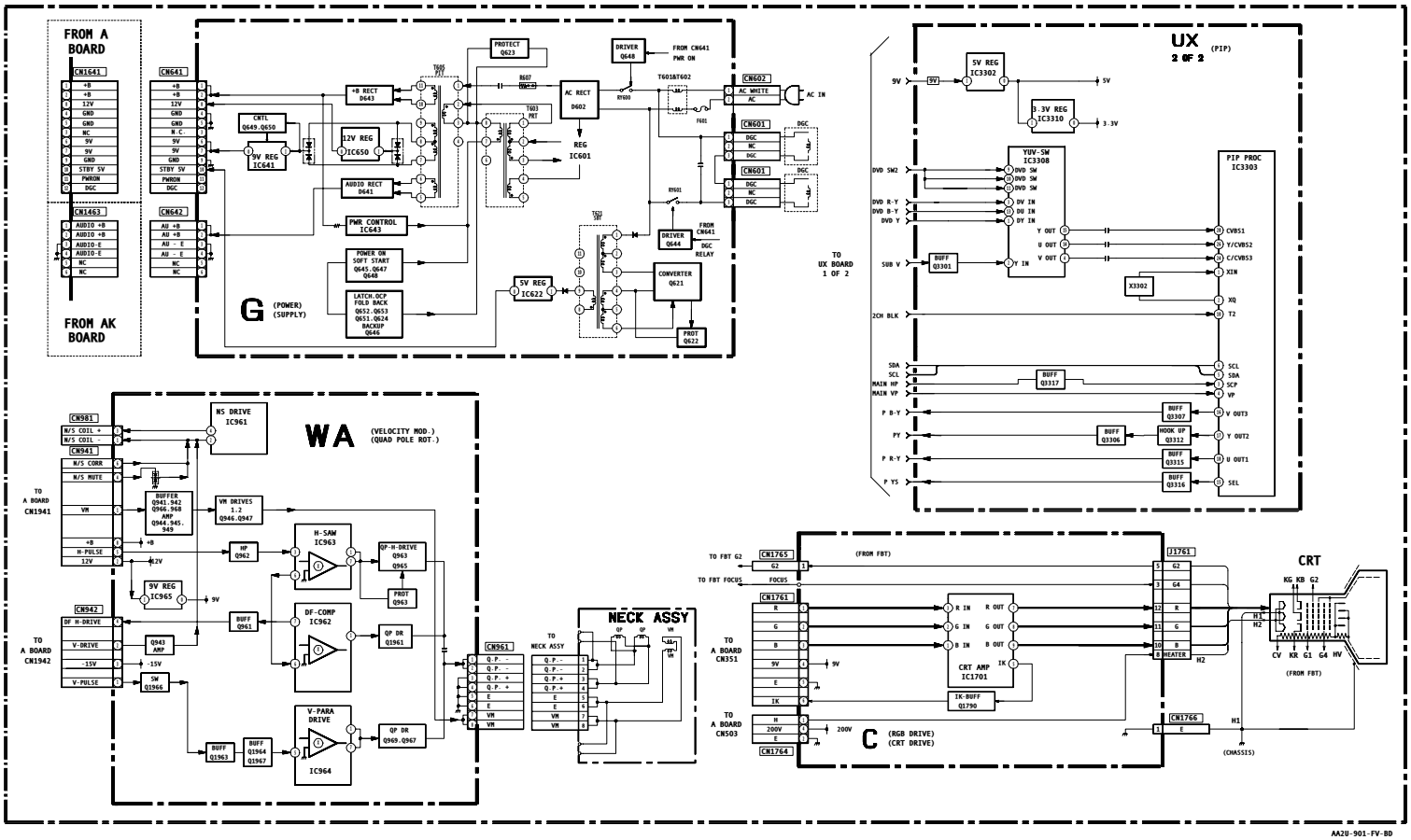

Downloaded from www.Manualslib.com manuals search engine

A BOARD SCHEMATIC DIAGRAM

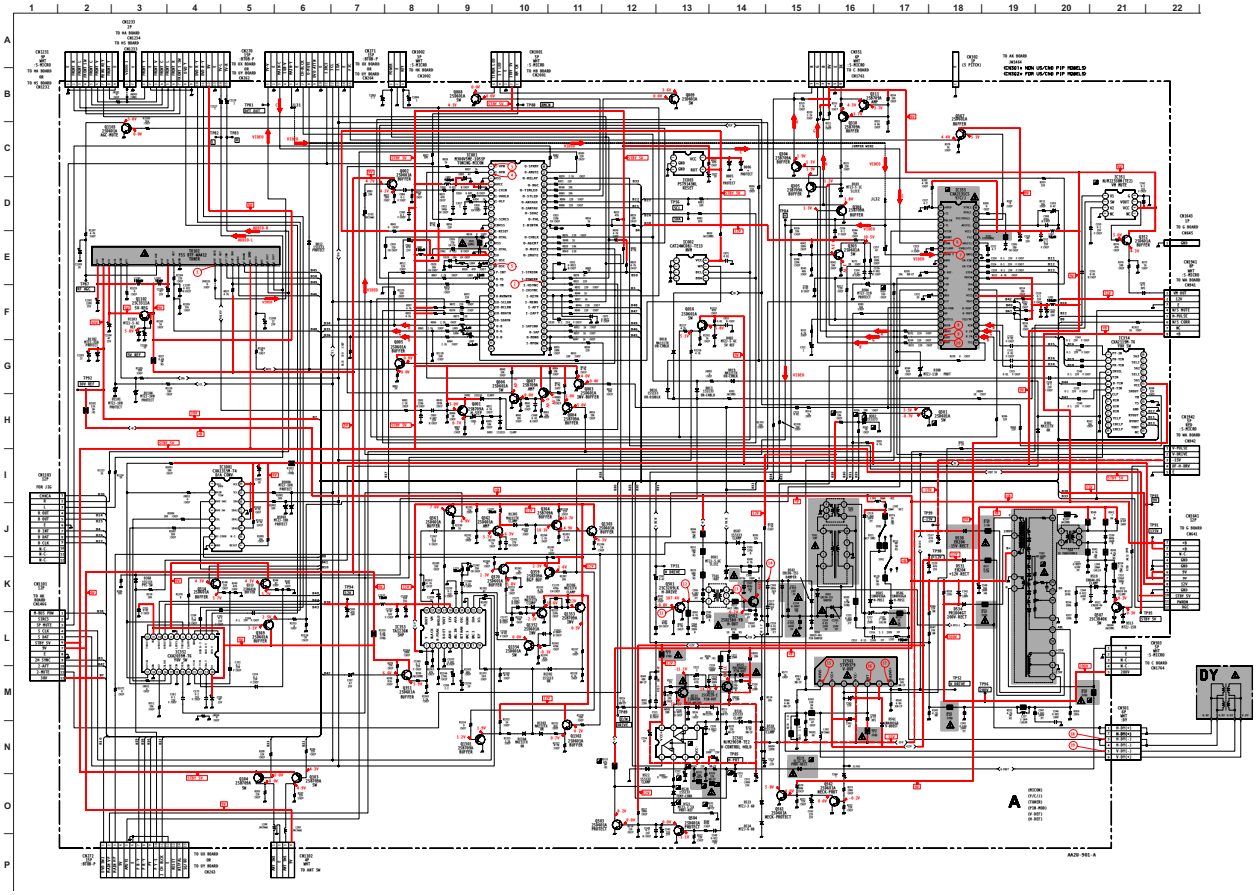

Downloaded from www.Manualslib.com manuals search engine

(*) A BOARD VARIANT MODEL LIST

REF. NO.	LOCATION	KV-32FV27	KV-36FS17/38FS17
C1501	I-3	250V	#
D005	B-11	#	MTZJ-T-77-5.6C
D006	B-11	P6KE6.8A	#
R541	G-17	6.8K 3W	2.2K 3W
R560	I-18	6.8K 3W	2.2K 3W

NOTE: # = Not Mounted

A BOARD WAVEFORMS

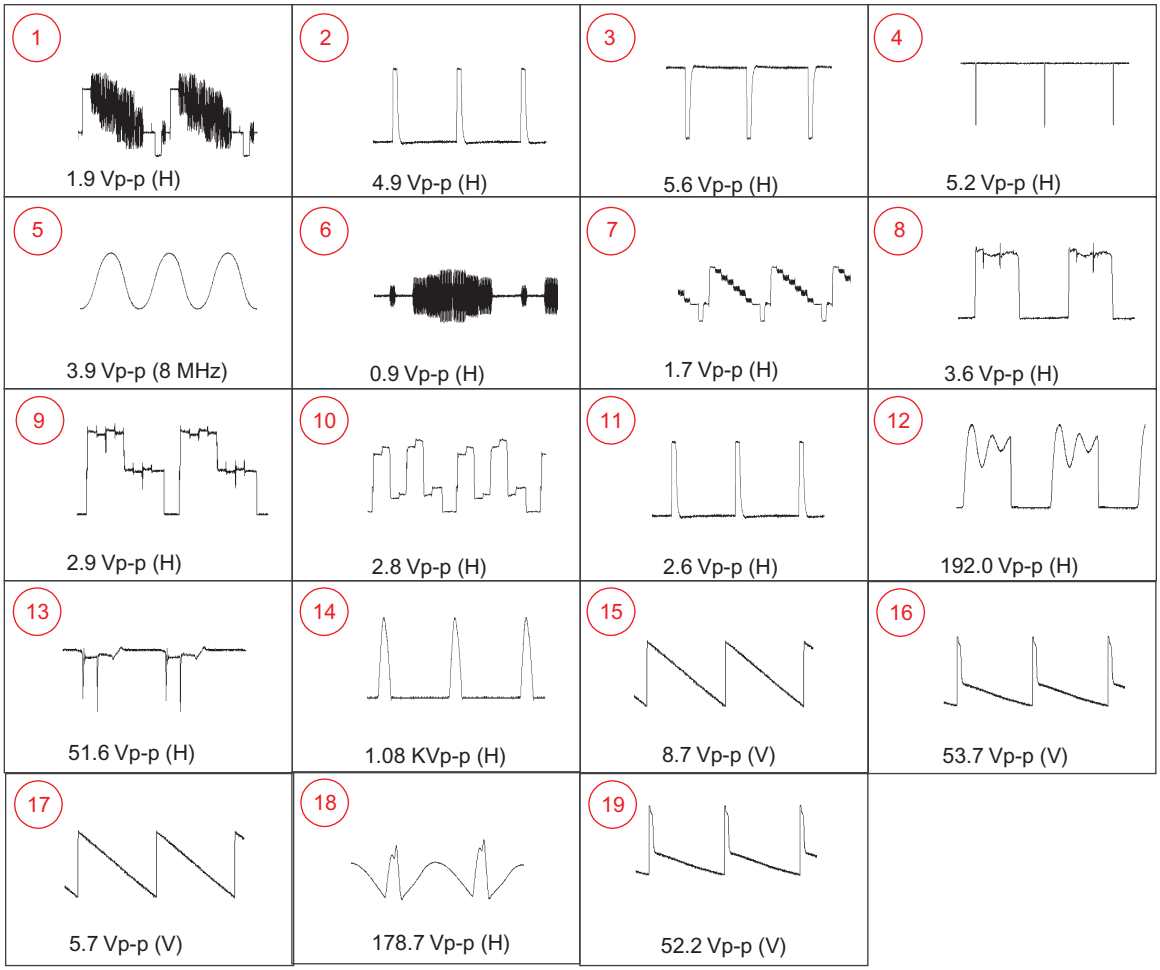

Downloaded from www.Manualslib.com manuals search engine

A BOARD IC VOLTAGE LIST

IC001	
pin	volt
1	1.9
2	4.0
3	GND
4	5.0
5	2.7
6	0.2
7	1.8
8	N/C
9	N/C
10	4.8
11	GND
12	5.0
13	2.2
14	GND
15	1.2
16	4.8
17	2.7
18	2.7
19	3.3
20	0.0
21	0.0
22	N/C
23	4.8
24	4.7
25	4.7
26	4.7
27	4.7
28	0.0
29	0.0
30	0.0
31	N/C
32	N/C
33	N/C
34	0.0
35	0.0
36	0.0
37	5.4
38	N/C
39	4.0
40	2.9
41	4.9
42	5.0
43	0.0
44	0.0
45	0.0
46	0.0
47	N/C
48	N/C
49	0.0
50	0.0
51	0.0
52	0.0

IC002	
pin	volt
1	GND
2	GND
3	GND
4	GND
5	4.7
6	4.7
7	0.0
8	5.0

IC003	
pin	volt
1	N/C
2	GND
3	GND
4	5.0
5	5.0

IC351	
pin	volt
1	5.8
2	0.3
3	5.3
4	GND
5	N/C
6	9.4
7	5.0
8	GND

IC352	
pin	volt
1	5.8
2	5.8
3	5.8
4	GND
5	2.2
6	0.1
7	GND
8	N/C
9	3.9
10	3.9
11	9.0
12	3.1
13	0.1

IC353	
pin	volt
1	4.5
2	3.7
3	4.9
4	4.5
5	GND
6	N/C
7	4.5
8	N/C
9	N/C
10	4.8
11	4.7
12	4.7
13	4.7
14	11.4
15	5.6
16	11.7
17	7.6
18	1.3
19	3.6
20	N/C

IC354	
pin	volt
1	4.0
2	4.0
3	4.0
4	0.3
5	4.0
6	4.0
7	4.0
8	2.2
9	N/C
10	N/C
11	N/C
12	N/C
13	N/C
14	N/C
15	N/C
16	3.9
17	3.9
18	3.9
19	GND

IC355	
pin	volt
1	3.5
2	N/C
3	1.5
4	N/C
5	5.0
6	N/C
7	4.5
8	4.8
9	5.3
10	GND
11	3.4
12	2.4
13	3.5
14	3.5
15	5.8
16	7.6
17	1.2
18	3.5
19	1.9
20	2.5
21	2.0
22	1.3
23	1.2
24	1.2
25	0.0
26	4.7
27	4.7
28	4.7
29	N/C
30	4.3
31	4.3
32	3.7
33	9.1
34	4.7
35	4.7
36	7.3
37	4.8
38	5.5
39	5.5
40	GND
41	N/C
42	7.3
43	N/C

44	9.3
45	5.5
46	5.1
47	1.9
48	N/C

IC501	
pin	volt
1	-3.5
2	8.2
3	8.0
4	-13.8
5	2.3
6	2.9
7	13.6
8	14.0

IC561	
pin	volt
1	1.4
2	14.0
3	-11.9
4	-13.8
5	0.4
6	14.4
7	1.4

IC1001	
pin	volt
1	N/C
2	0.1
3	0.3
4	N/C
5	4.4
6	4.7
7	4.7
8	GND
9	9.3
10	N/C
11	9.3
12	9.3
13	GND
14	4.7
15	4.7
16	9.3

All voltages are in V

TU102	
pin	volt
1	8.7
2	30.3
3	5.0
4	4.7
5	4.7
6	0.0
7	7.4
8	N/C
9	8.8
10	4.8
11	GND
12	5.9
13	5.5
14	5.0
15	6.1
16	0.0
17	0.0
18	5.0
19	0.0
20	N/C
21	4.5
22	4.5

All voltages are in V

Downloaded from www.Manualslib.com manuals search engine

A BOARD IC BLOCK DIAGRAMS

A BOARD: IC355 CXA2131CS

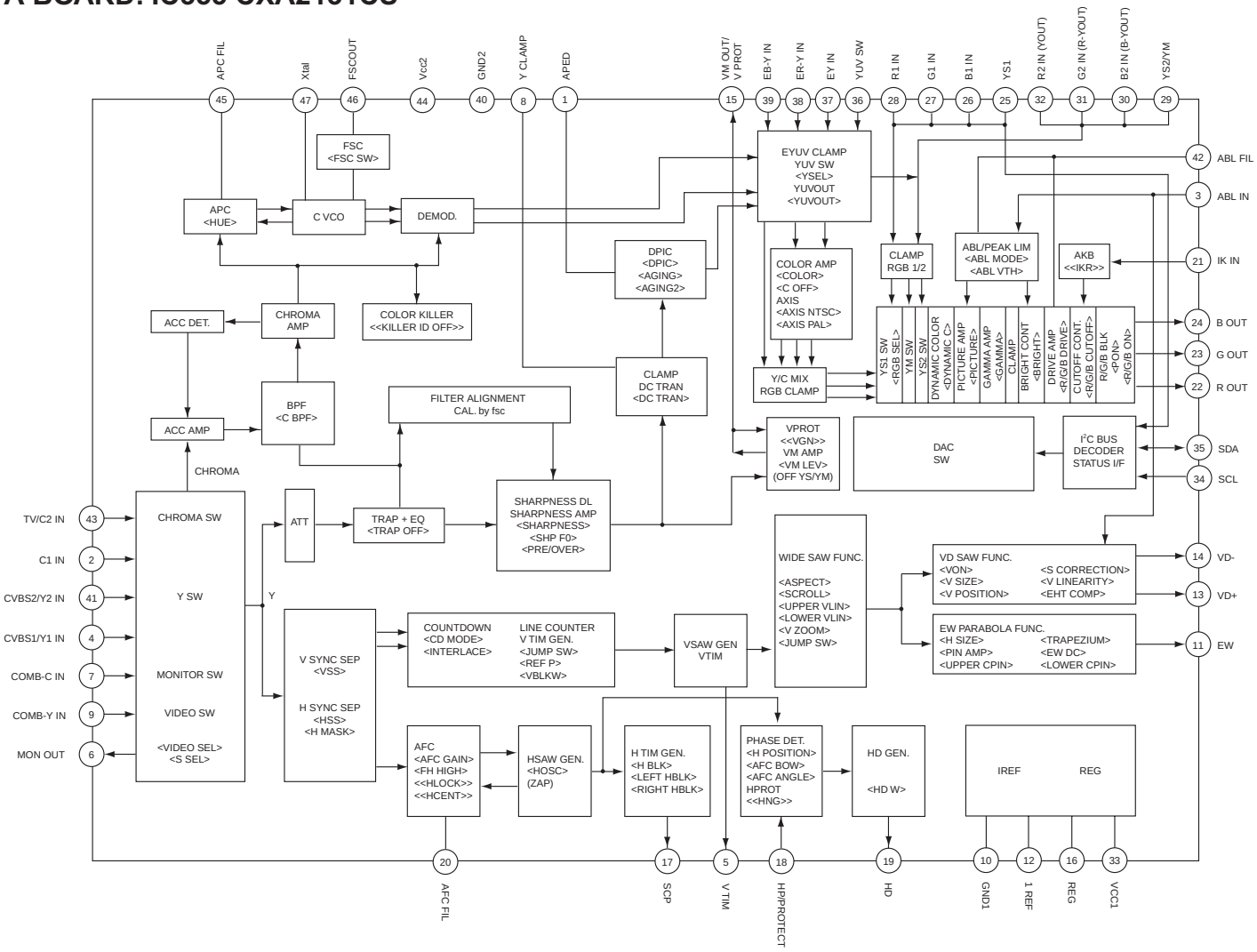

A BOARD: IC561 STV9379

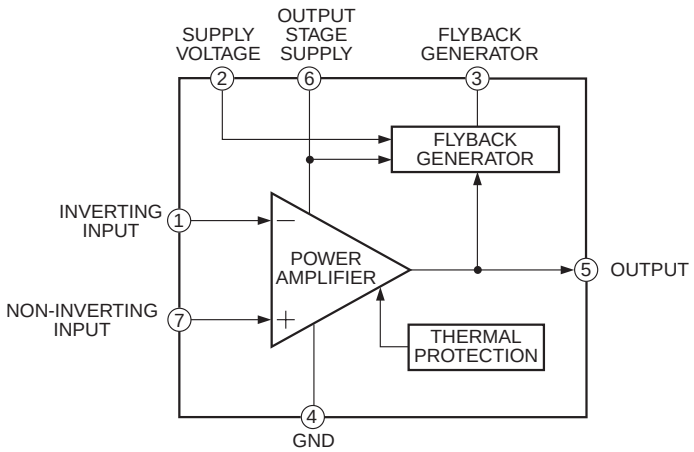

Downloaded from www.Manualslib.com manuals search engine

A [MICON, Y/C/J, TUNER, PIN-MOD, V. DEF, H. DEF]

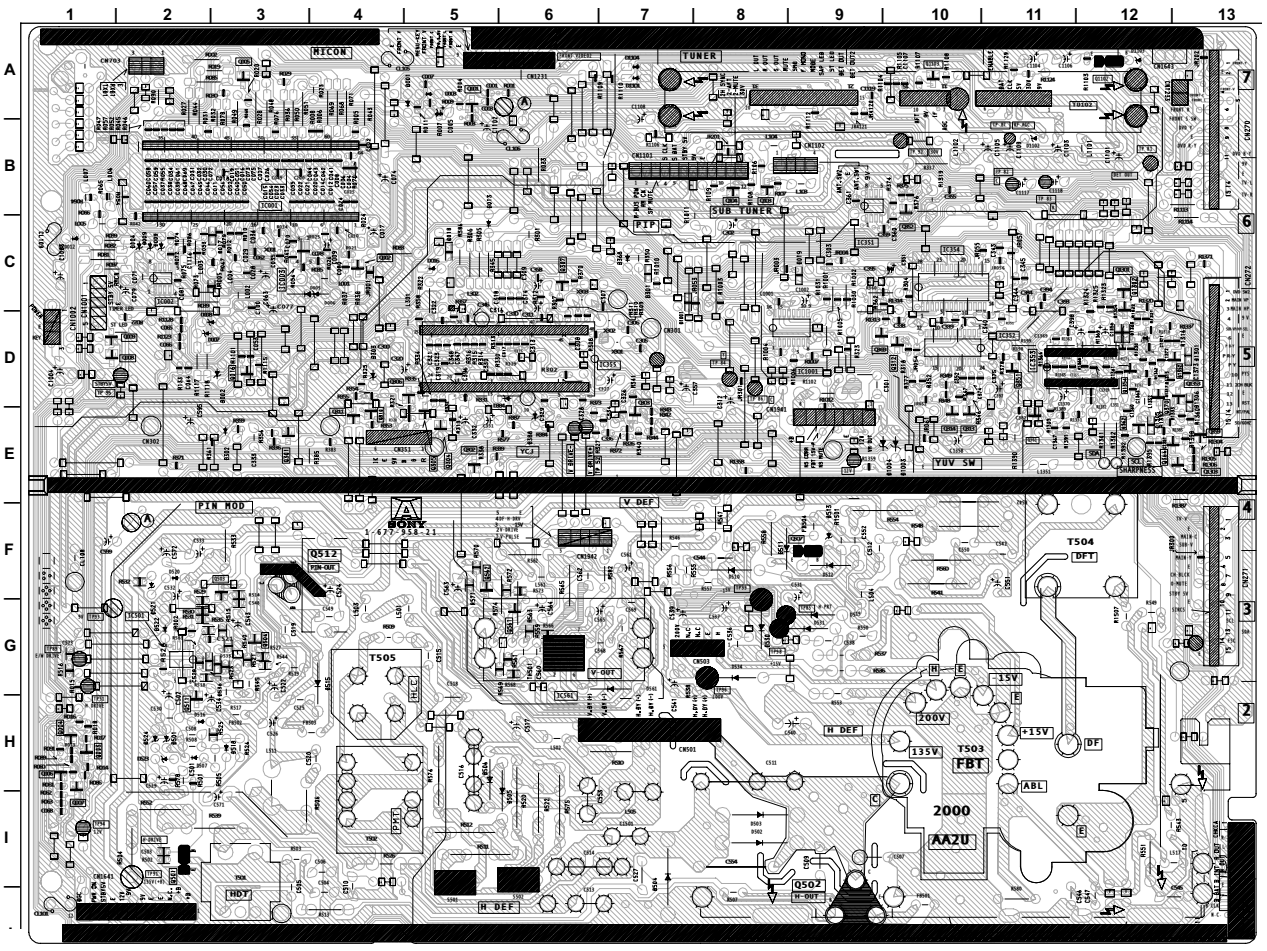

A BOARD LOCATOR LIST

DIODE		IC352	D-10
D001	A-4	IC353	C-10
D002	D-2	IC354	C-10
D003	A-5	IC355	D-6
D005	C-3	IC501	F-2
D006	C-6	IC561	G-6
D012	C-1	IC1001	D-8
D013	B-5	**TRANSISTOR**	
D016	C-4	Q001	A-5
D018	C-5	Q002	C-4
D019	C-8	Q003	H-1
D301	C-7	Q004	G-1
D302	E-2	Q005	A-3
D303	D-4	Q006	H-1
D368	C-6	Q007	H-1
D384	D-5	Q008	D-10
D388	D-5	Q009	D-10
D501	H-2	Q016	D-2
D502	H-8	Q103	B-8
D503	H-8	Q104	B-7
D504	I-7	Q301	E-3
D505	H-5	Q303	D-6
D506	H-5	Q304	D-4
D507	H-2	Q305	D-4
D510	F-7	Q306	D-4
D511	E-8	Q307	C-6
D512	F-8	Q310	D-4
D513	E-8	Q311	D-3
D515	G-3	Q313	D-10
D516	G-2	Q314	D-9
D518	H-3	Q351	D-10
D519	F-8	Q352	B-9
D520	F-2	Q359	D-12
D521	F-2	Q361	D-10
D522	F-2	Q362	E-11
D523	H-2	Q364	E-12
D524	H-2	Q369	D-9
D530	G-8	Q370	D-11
D531	F-8	Q501	I-2
D534	G-7	Q502	I-8
D535	G-2	Q503	F-2
D536	G-2	Q504	F-3
D561	G-7	Q507	F-8
D1003	E-9	Q511	G-2
D1004	E-9	Q512	F-3
D1101	A-6	Q561	F-4
D1102	B-10	Q562	F-4
D1103	A-11	Q1102	A-11
D1104	A-6	Q1103	A-9
D1301	D-12	Q1301	C-11
D1302	C-11	Q1302	C-11
D1303	C-11	Q1303	E-12
D1304	C-11	Q1352	D-11
D1305	D-11	Q1353	D-12
D1306	D-12	Q1354	D-11
IC		**CRYSTAL**	
IC001	B-2	X001	C-3
IC002	C-2	X302	D-6
IC003	C-3		
IC351	C-9		

Downloaded from www.Manualslib.com manuals search engine

AK BOARD SCHEMATIC DIAGRAM

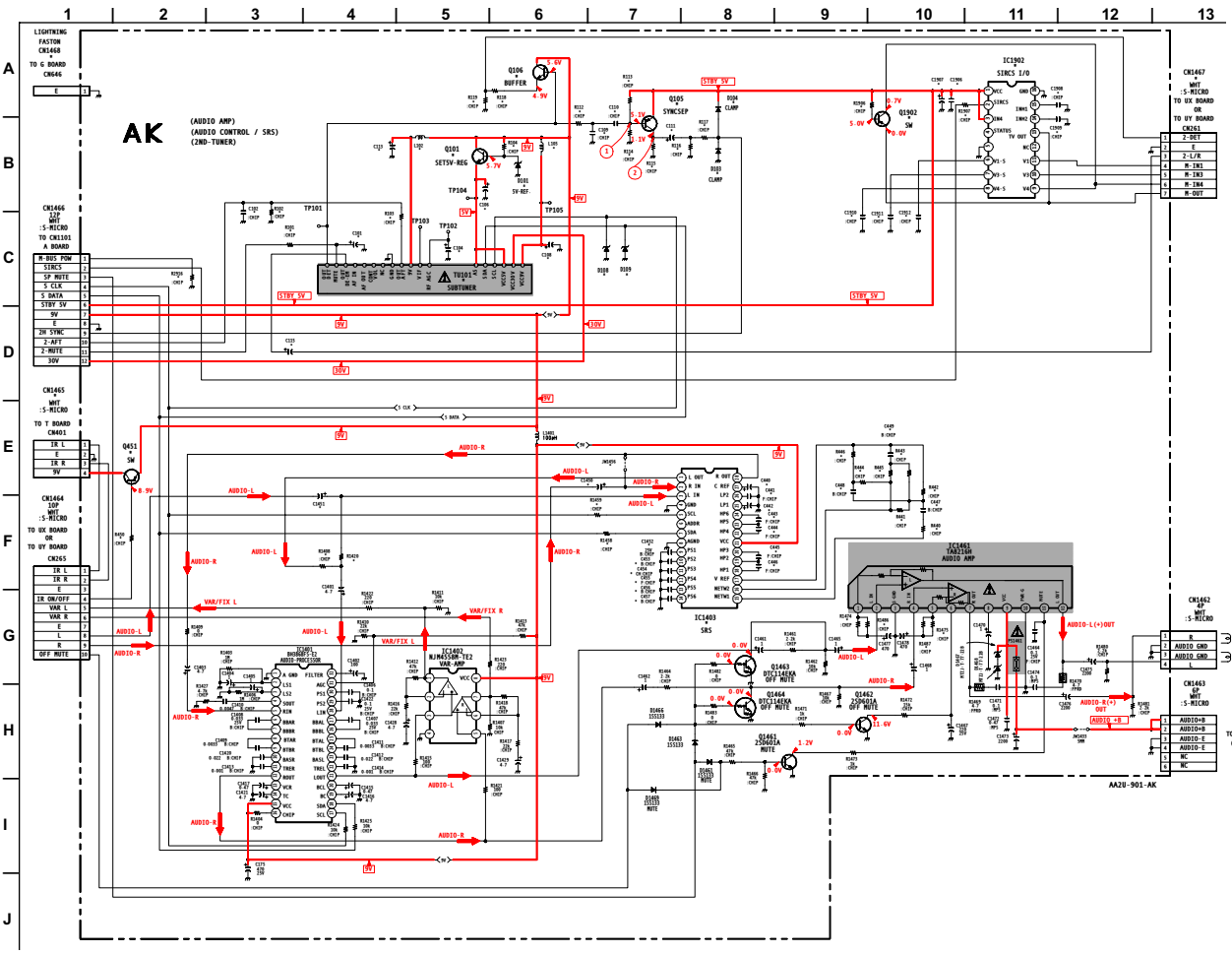

AK BOARD WAVEFORMS

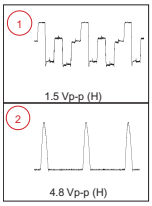

Downloaded from www.Manualslib.com manuals search engine

(*) AK BOARD VARIANT MODEL LIST

REF. NO.	LOCATION	KV-36FS13	KV-36FS17/ 38FS17	KV-32FV27 / 36FV27
C101	D-4	#	1µF	1µF
C102	C-3	#	0.0022µF	0.0022µF
C104	D-5	#	10µF	10µF
C106	C-6	#	47µF 25V	47µF 25V
C108	D-6	#	1000µF 25V	1000µF 25V
C109	B-7	#	220PF	220PF
C110	B-7	#	0.047µF 25V	0.047µF 25V
C111	C-7	#	1µF	1µF
C113	C-5	#	220µF 25V	220µF 25V
C115	A-5	#	1µF	1µF
C440	E-8	#	#	22µF
C441	F-8	#	#	0.1µF 25V
C442	F-8	#	#	1µF
C443	F-8	#	#	0.1µF 25V
C444	F-8	#	#	1µF 16V
C445	F-8	#	#	0.1µF 25V
C446	F-8	#	#	1µF 16V
C447	F-10	#	#	0.47µF 16V
C448	E-9	#	#	0.0047µF
C449	E-10	#	#	0.47µF 16V
C453	F-7	#	#	0.0047µF
C454	F-7	#	#	470PF
C455	F-7	#	#	0.1µF 25V
C456	G-7	#	#	0.015µF
C457	G-7	#	#	0.0022µF
C1450	E-7	#	#	4.7µF
C1451	F-4	#	#	4.7µF
C1452	F-7	#	#	0.027µF 25V
C1906	B-11	#	#	0.01µF
C1907	B-10	#	#	10µF
C1908	B-12	#	#	0.001µF
C1909	B-12	#	#	0.001µF
C1910	D-10	#	#	0.001µF
C1911	D-10	#	#	0.001µF
C1912	D-10	#	#	0.001µF
CN1465	F-1	#	#	4P
CN1467	C-13	#	7P	7P
CN1468	B-13	#	1P	1P
D101	C-6	#	MTZJ-T-77-5.6C	MTZJ-T-77-5.6C
D103	C-8	#	1SS133T-77	1SS133T-77
D104	B-8	#	1SS133T-77	1SS133T-77
D108	D-7	#	MTZJ-T-77-10B	MTZJ-T-77-10B
D109	D-7	#	MTZJ-T-77-10B	MTZJ-T-77-10B
IC1403	E-8	#	#	TDA7467D013TR
IC1902	B-11	#	#	NJM2145M-TE2
JW1456	E-7	15MM	15MM	#
L102	C-5	#	10µH	10µH
L105	C-6	#	100µH	100µH
Q101	C-6	#	2SC3311A-QRSTA	2SC3311A-QRSTA
Q105	B-7	#	2SB709A-QRS-TX	2SB709A-QRS-TX
Q106	B-6	#	2SD601A-QRS-TX	2SD601A-QRS-TX
Q451	F-2	#	#	2SB734-T-34
Q1902	B-9	#	#	2SB709A-QRS-TX
R101	D-4	#	4.7K	4.7K
R102	C-3	#	33K	33K

NOTE: # = Not Mounted

Downloaded from www.Manualslib.com manuals search engine

(*) AK BOARD VARIANT MODEL LIST (CONT.)

REF. NO.	LOCATION	KV-36FS13	KV-36FS17/ 38FS17	KV-32FV27
R103	C-5	#	22K	22K
R104	C-6	#	1K	1K
R112	B-7	#	2.2K	2.2K
R113	B-7	#	100K	100K
R114	B-7	#	1M	1M
R115	C-7	#	10K	10K
R116	C-8	#	10K	10K
R117	C-8	#	4.7K	4.7K
R118	A-7	#	470	470
R119	A-7	#	560	560
R440	F-10	#	#	1K
R441	F-10	#	#	120K
R442	E-10	#	#	4.7K
R443	E-10	#	#	1.5K
R444	E-10	#	#	47K
R445	E-10	#	#	33K
R446	E-9	#	#	3.9K
R450	F-2	#	#	10K
R1408	F-3	#	#	0
R1486	G-10	470	470	#
R1487	G-10	470	470	#
R1420	F-4	0	0	#
R1458	F-7	#	#	220
R1459	F-7	#	#	220
R1474	G-9	680	680	100
R1475	G-10	680	680	100
R1906	B-9	#	#	10K
R1907	B-11	#	#	220
R2916	E-10	#	#	10K
TU101	D-5	#	FSS BTF-FA402	FSS BTF-FA402

NOTE: # = Not Mounted

AK BOARD IC VOLTAGE LIST

IC1401		16	9.1	IC1402		6	N/C	23	4.5	10	GND	13	0.0
pin	volt	17	4.7	pin	volt	7	4.7	24	4.5	11	4.2	14	0.4
1	GND	18	4.7	1	4.5	8	GND	25	4.5	12	15.7	15	0.4
2	0.7	19	1.9	2	4.5	9	4.5	26	4.5	IC1902		16	GND
3	1.2	20	1.0	3	4.5	10	4.5	27	4.5	pin	volt	All voltages are in V	
4	4.5	21	4.5	4	GND	11	4.5	28	3.9	1	5.0		
5	4.5	22	4.5	5	4.5	12	4.5	IC1461		2	3.9		
6	4.5	23	4.5	6	4.5	13	4.5	pin	volt	3	5.0		
7	4.5	24	4.5	7	4.5	14	4.5	1	1.5	4	NC		
8	4.5	25	4.5	8	9.1	15	4.5	2	4.5	5	GND		
9	4.5	26	4.5	IC1403		16	4.5	3	GND	6	0.0		
10	4.5	27	4.5	pin	volt	17	4.5	4	4.5	7	0.0		
11	0.0	28	4.5	1	3.9	18	4.5	5	1.5	8	0.0		
12	4.5	29	4.5	2	4.5	19	4.5	6	11.6	9	0.7		
13	1.0	30	4.5	3	4.5	20	4.5	7	16.0	10	0.7		
14	1.9	31	2.9	4	GND	21	9.1	8	5.1	11	0.7		
15	9.1	32	4.5	5	4.7	22	4.5	9	34.5	12	N/C		

TU101		16	3.1
pin	volt	17	0.0
1	9.3	18	4.0
2	30.2	All voltages are in V	
3	5.1		
4	4.7		
5	0.0		
6	5.0		
7	7.9		
8	0.0		
9	9.4		
10	7.9		
11	GND		
12	N/C		
13	N/C		
14	N/C		
15	N/C		

Downloaded from www.Manualslib.com manuals search engine

AK [AUDIO AMP, AUDIO CONTROL/SRS, 2ND TUNER]

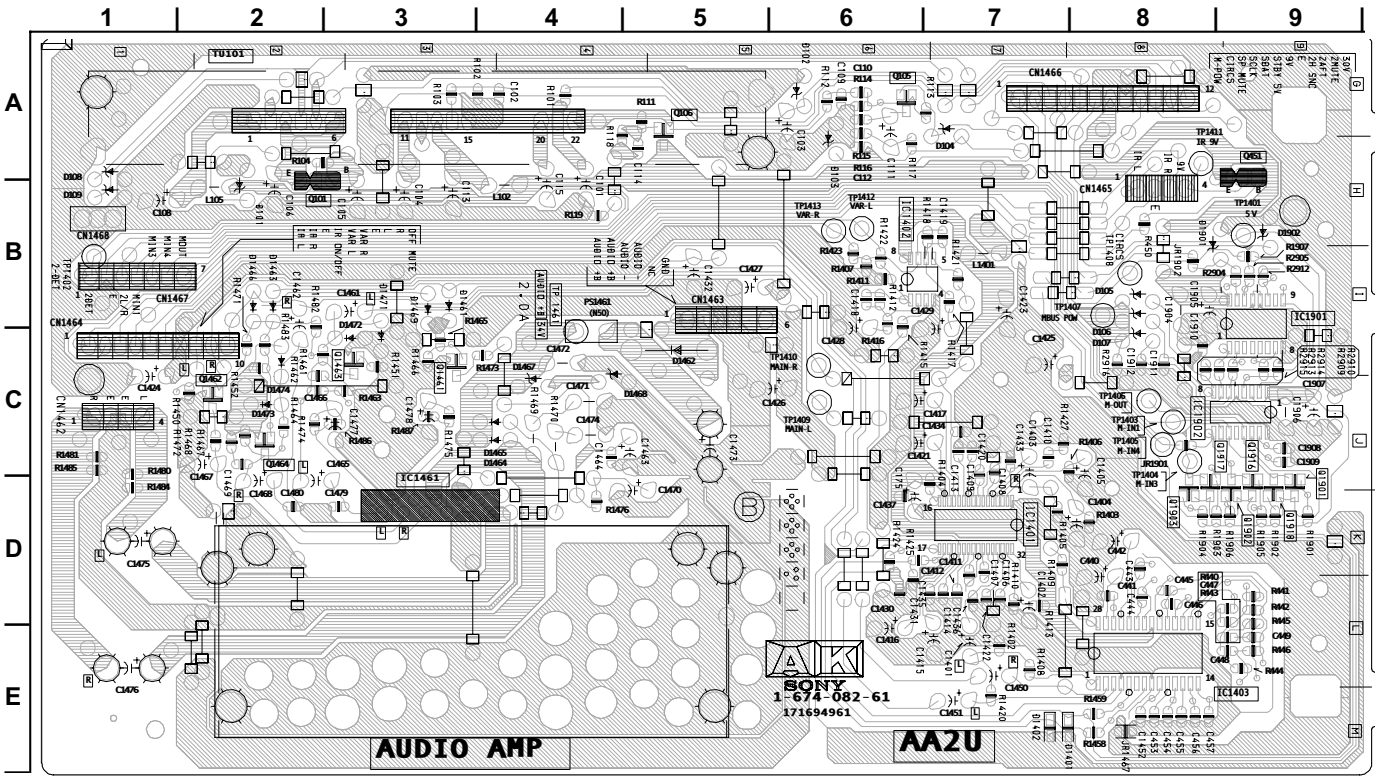

AK BOARD LOCATOR LIST

DIODE		D109	B-1	D1468	C-4	IC1403	E-8	Q105	A-6	Q1463	C-2
D101	A-2	D1461	B-3	D1469	C-4	IC1461	D-3	Q106	A-4	Q1464	C-2
D103	A-6	D1463	B-2	IC		IC1902	C-8	Q451	A-8	Q1902	D-8
D104	A-6	D1466	B-2	IC1401	D-6	TRANSISTOR		Q1461	C-3		
D108	A-1	D1467	C-4	IC1402	B-6	Q101	A-2	Q1462	C-2		

Downloaded from www.Manualslib.com manuals search engine

C BOARD SCHEMATIC DIAGRAM

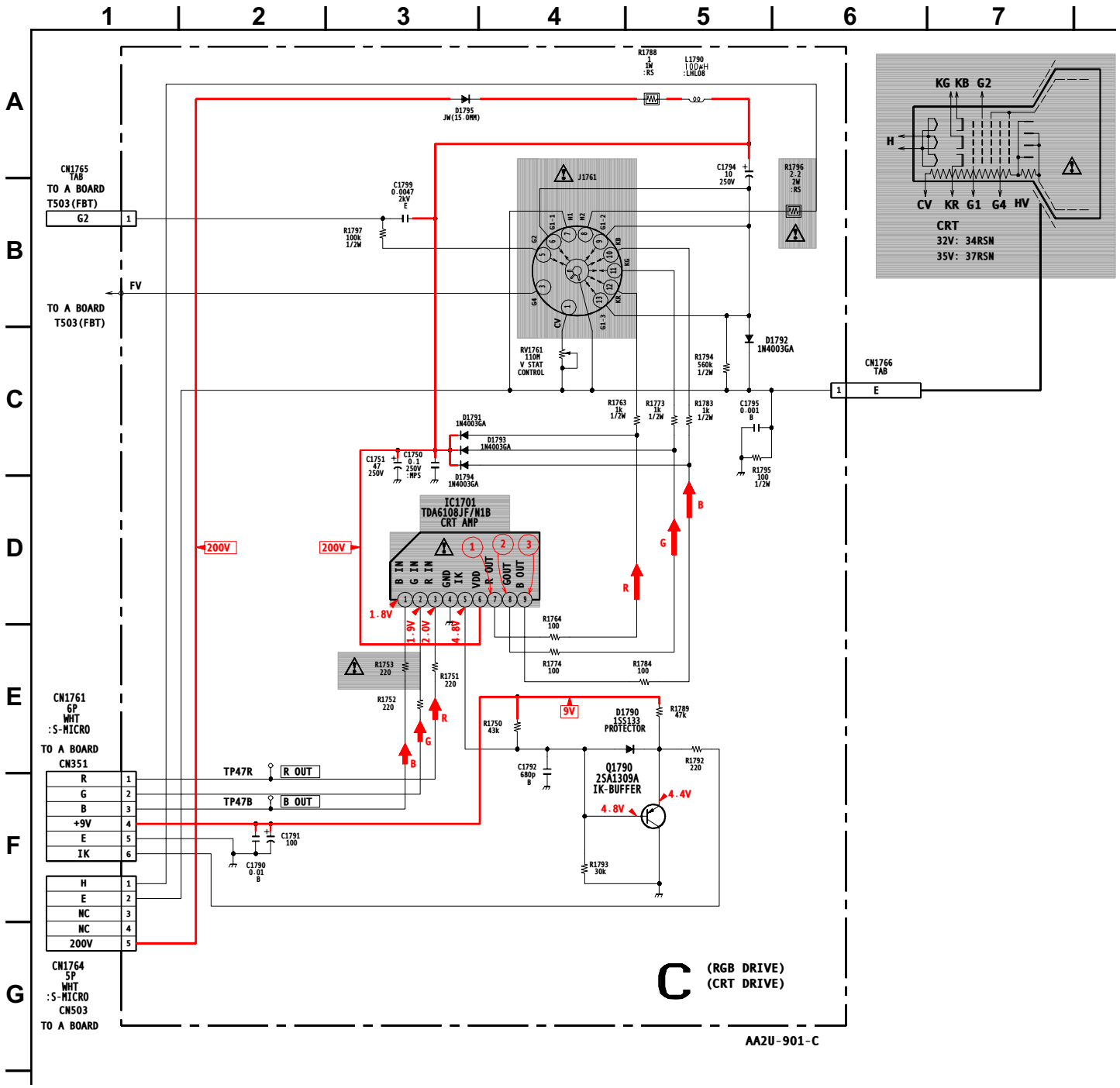

C BOARD WAVEFORMS

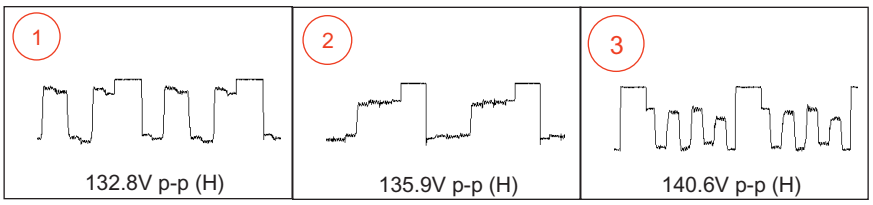

Downloaded from www.Manualslib.com manuals search engine

C [RGB DRIVE, CRT DRIVE]

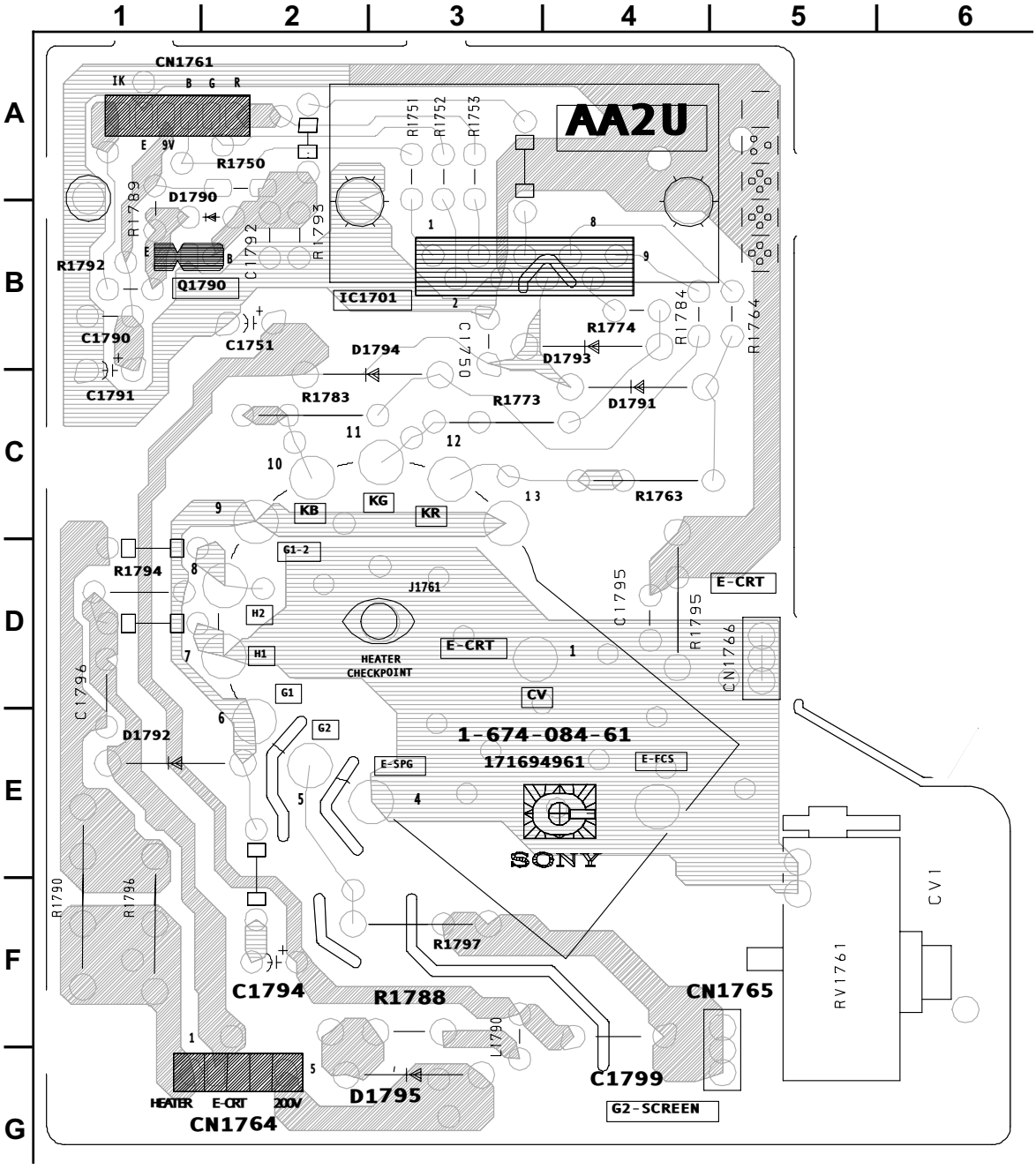

Downloaded from www.Manualslib.com manuals search engine

G BOARD SCHEMATIC DIAGRAM

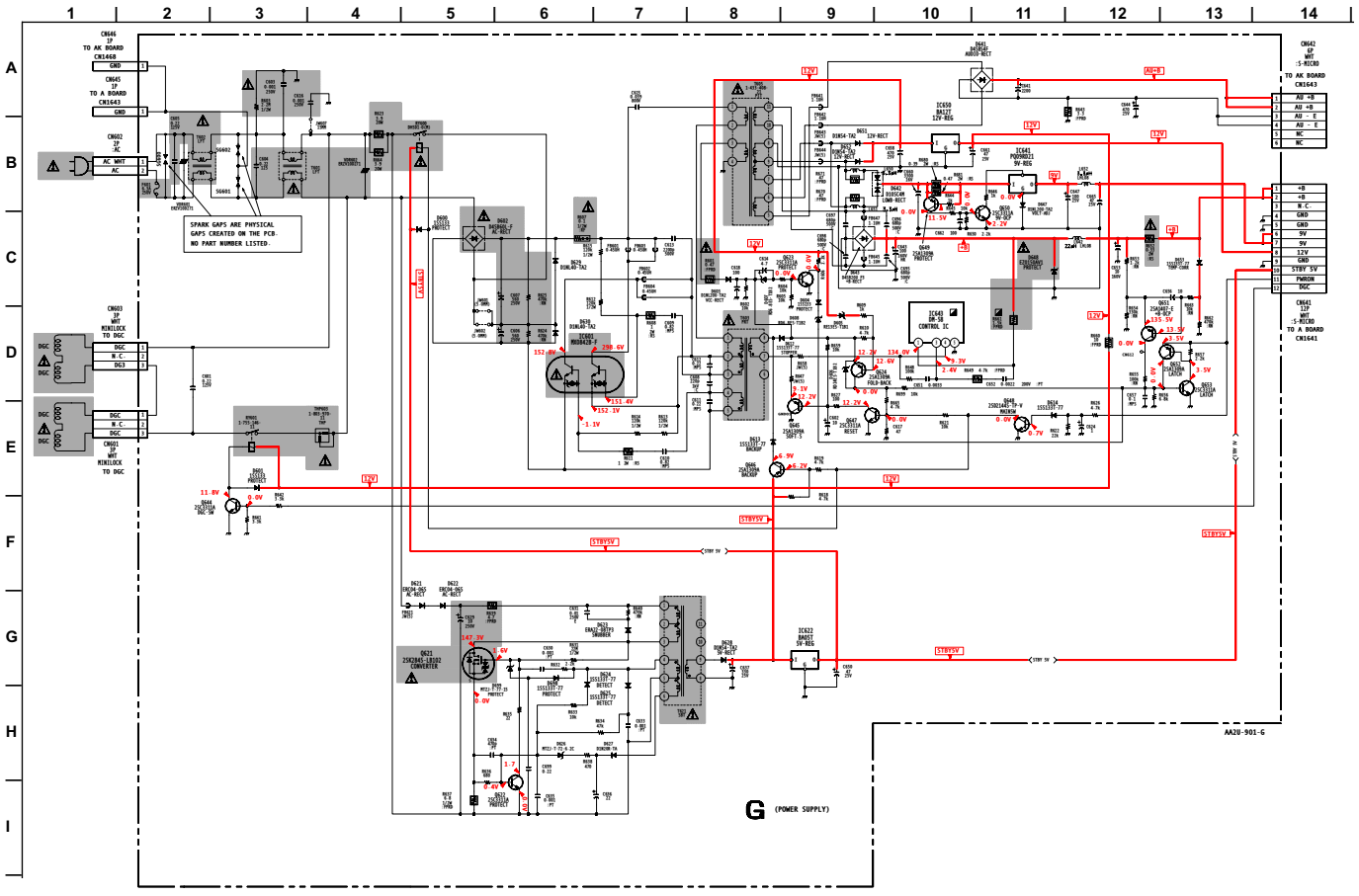

Downloaded from www.Manualslib.com manuals search engine

G [POWER SUPPLY]

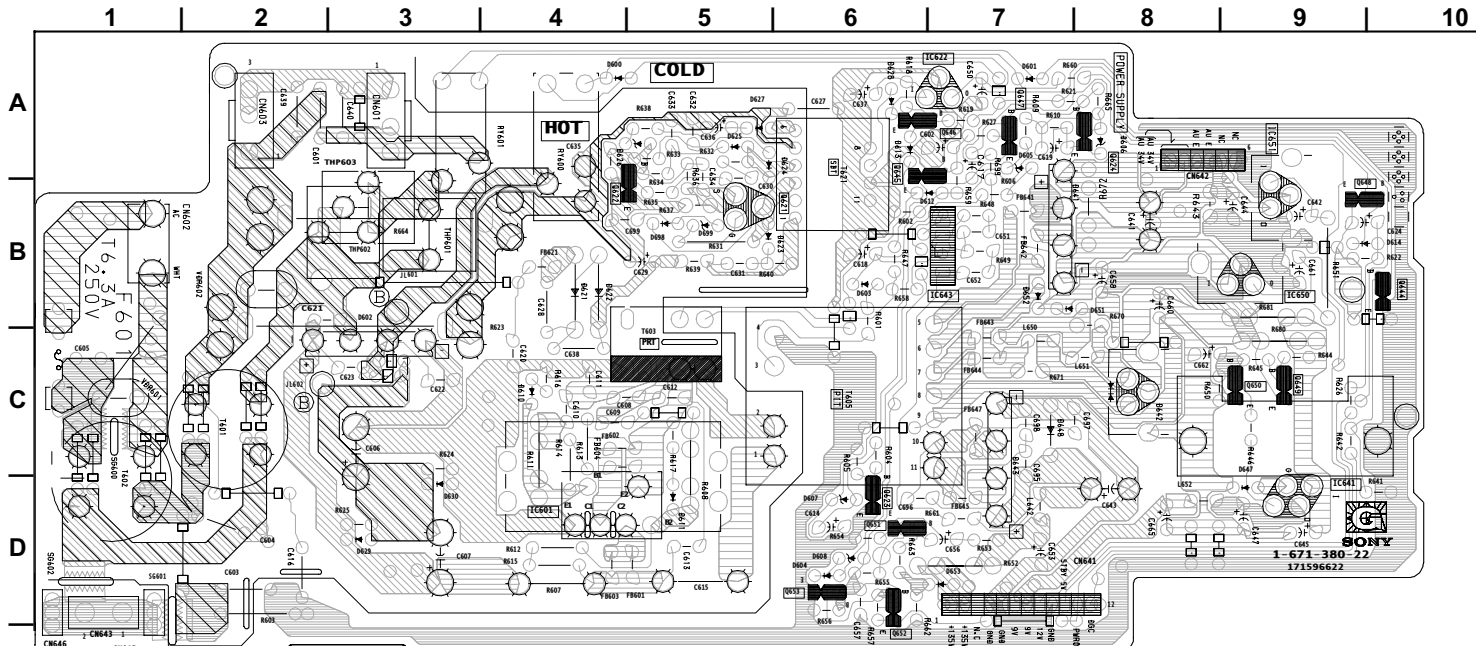

G BOARD LOCATOR LIST

DIODE		D608	D-6	D626	A-4	D648	C-7	IC641	C-9	Q645	A-6
D600	A-4	D612	B-6	D627	A-5	D651	B-8	IC643	B-6	Q646	A-7
D601	A-7	D613	A-6	D628	A-6	D652	B-7	IC650	B-9	Q647	A-7
D602	B-3	D614	B-9	D629	D-3	D653	D-6	TRANSISTOR		Q648	B-9
D603	B-6	D621	B-4	D630	D-3	D698	B-5	Q621	B-6	Q649	C-9
D604	D-6	D622	B-4	D641	B-7	D699	B-5	Q622	A-4	Q650	C-9
D605	A-7	D623	B-5	D642	C-7	IC		Q623	B-6	Q651	D-6
D606	A-7	D624	A-5	D643	C-7	IC601	D-4	Q624	A-8	Q652	D-6
D607	d-6	D625	A-5	D647	C-9	IC622	A-7	Q644	B-10	Q653	D-6

Downloaded from www.Manualslib.com manuals search engine

HA BOARD SCHEMATIC DIAGRAM (KV-32FV27/36FV27 ONLY)

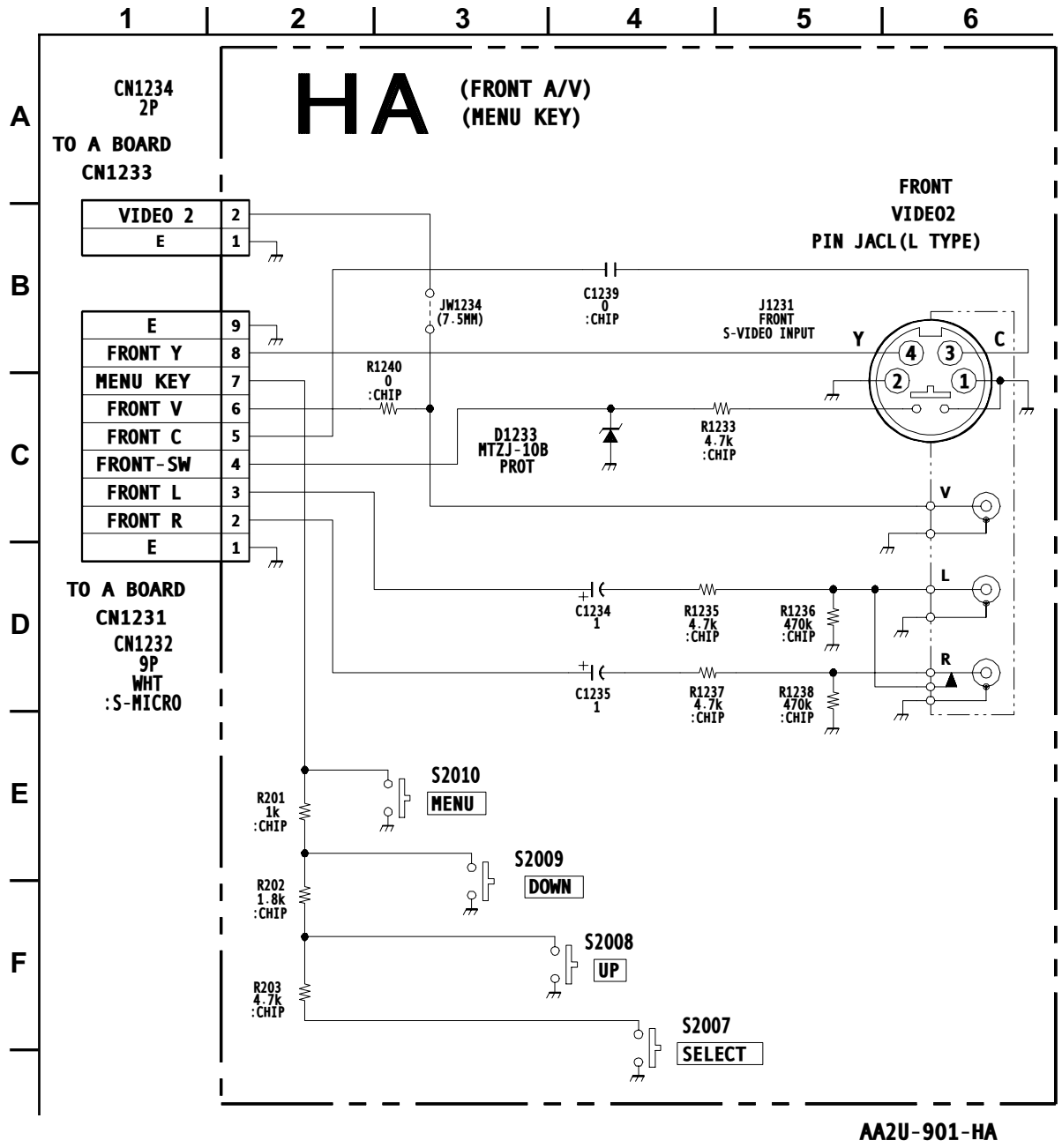

HA [FRONT/AV, MENU KEY]

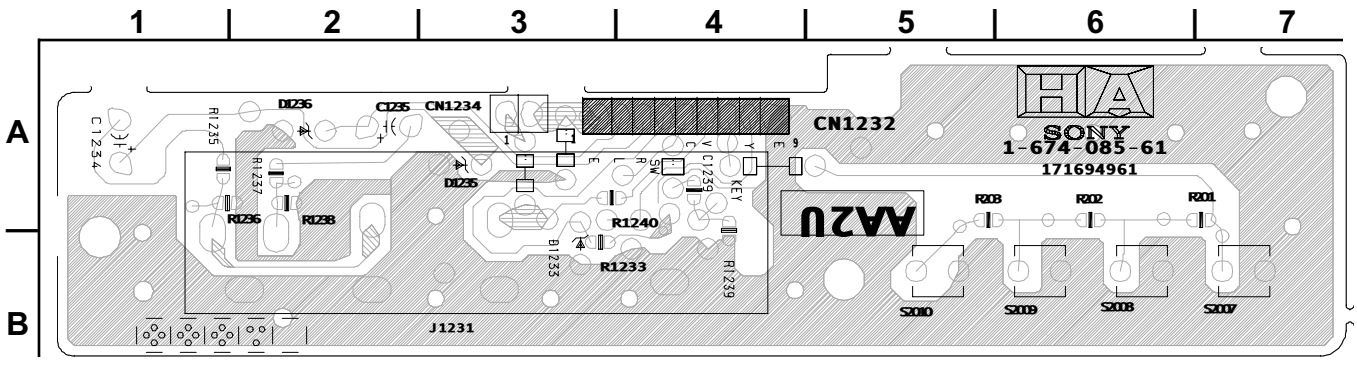

Downloaded from www.Manualslib.com manuals search engine

HB BOARD SCHEMATIC DIAGRAM (KV-32FV27/36FV27 ONLY)

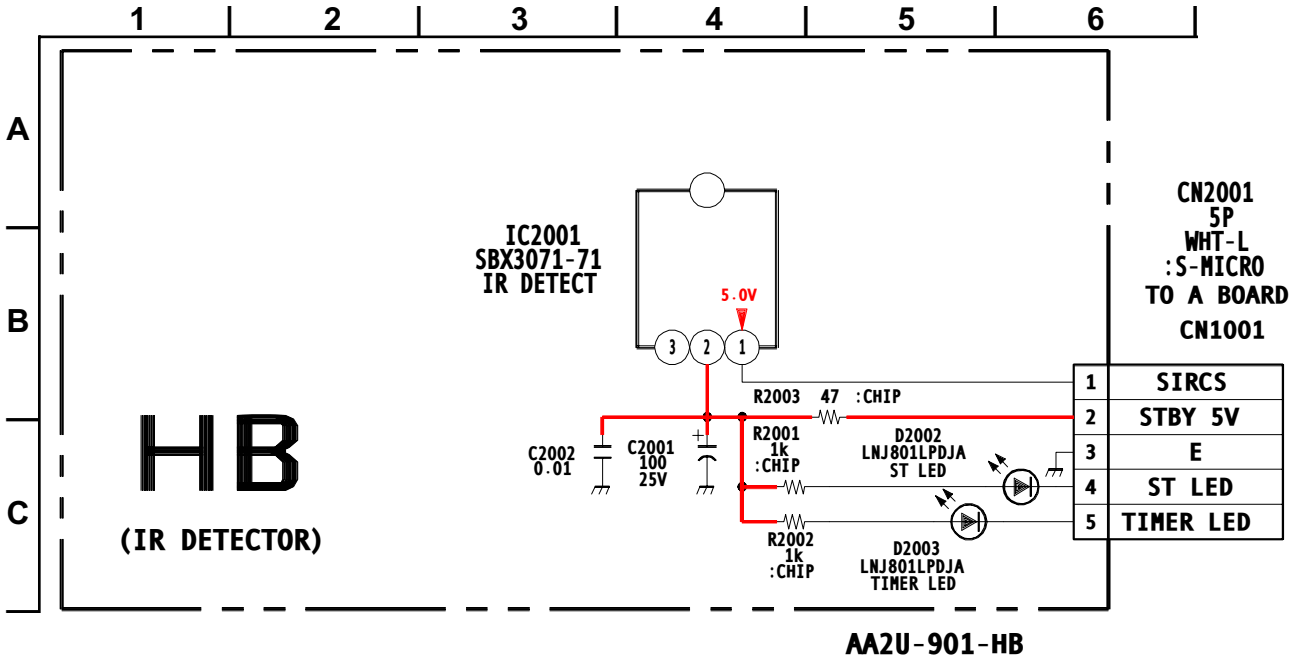

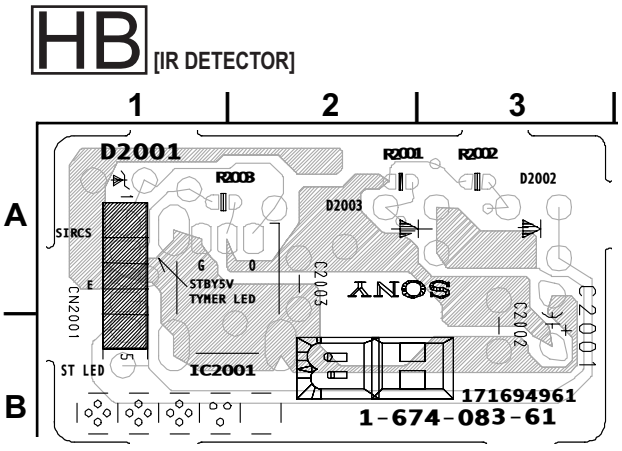

Downloaded from www.Manualslib.com manuals search engine

HS [FRONT A/V, MENU KEY, IR DETECTOR]

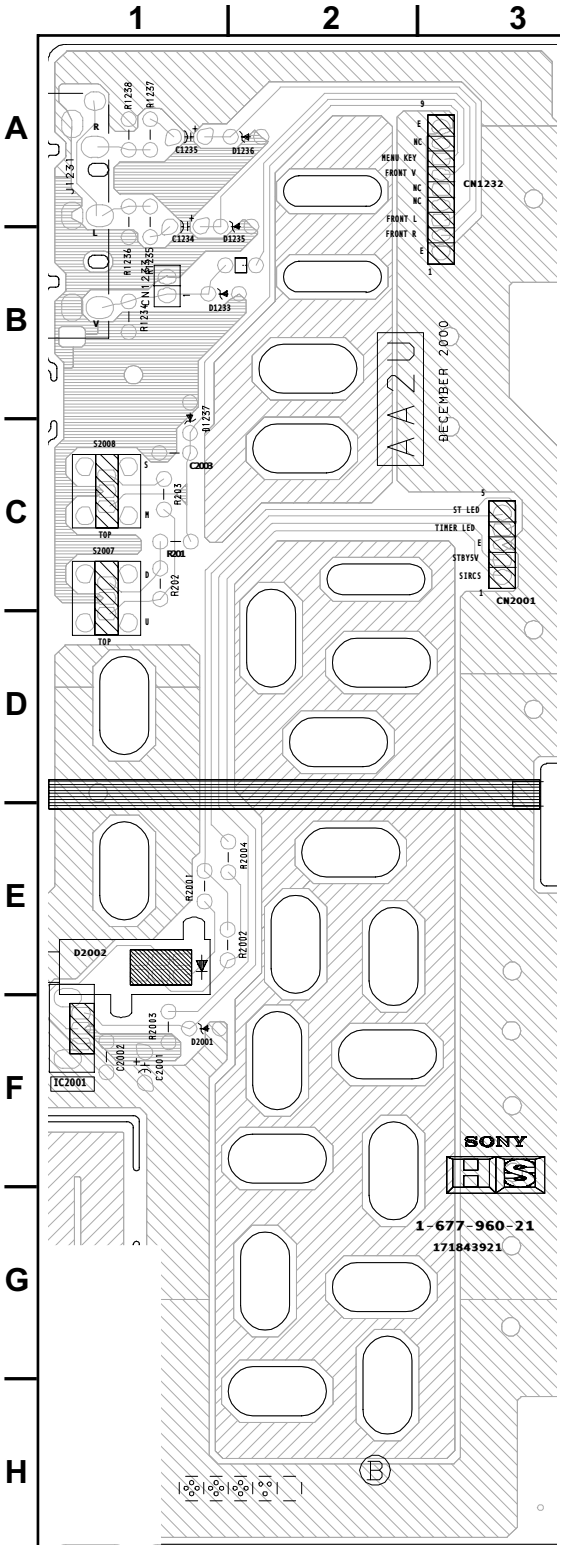

HS BOARD SCHEMATIC DIAGRAM

(KV-36FS13/36FS17/38FS17)

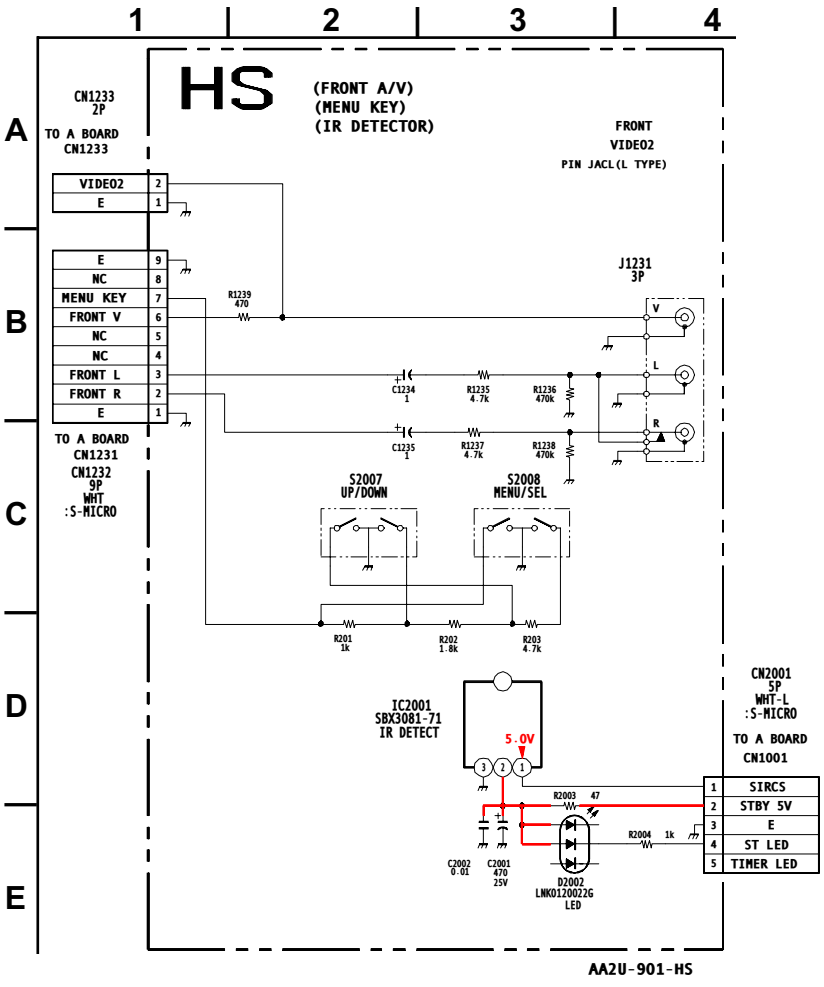

Downloaded from www.Manualslib.com manuals search engine

HX BOARD SCHEMATIC DIAGRAM

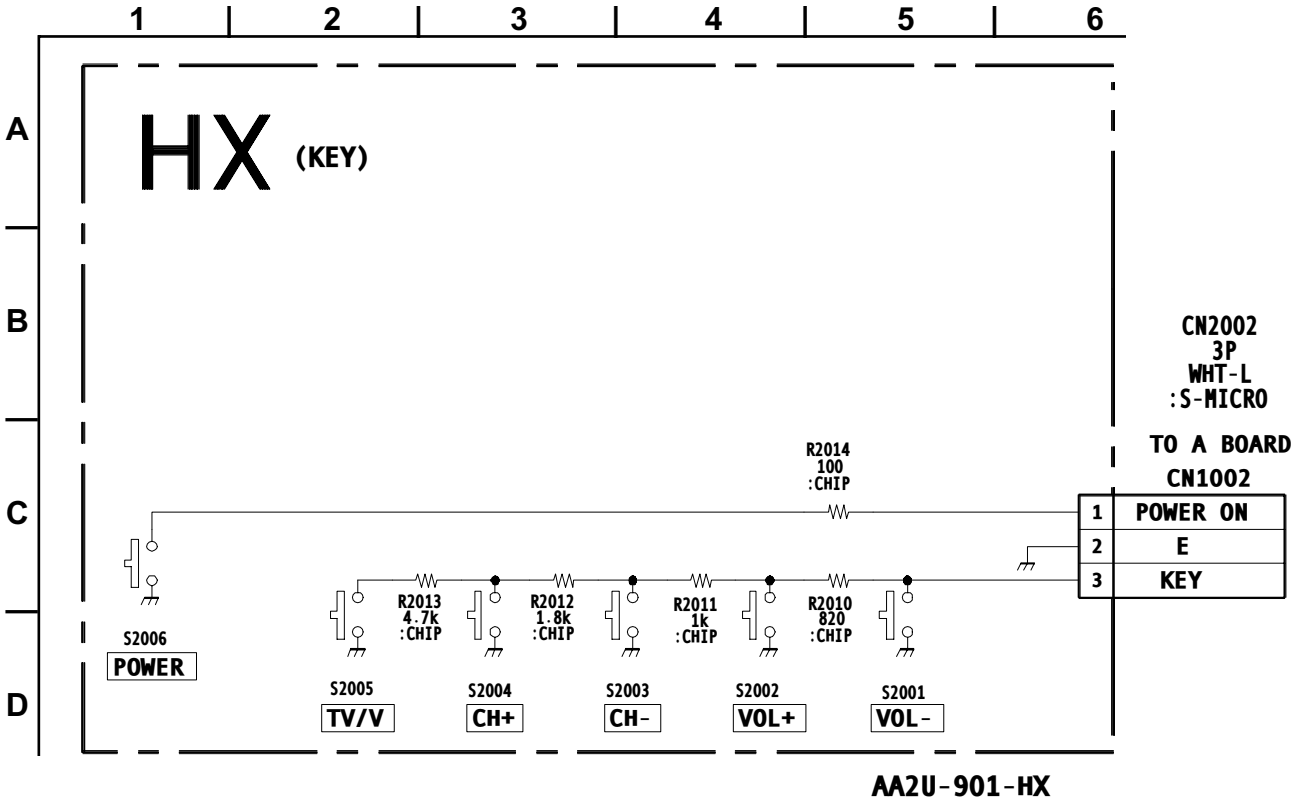

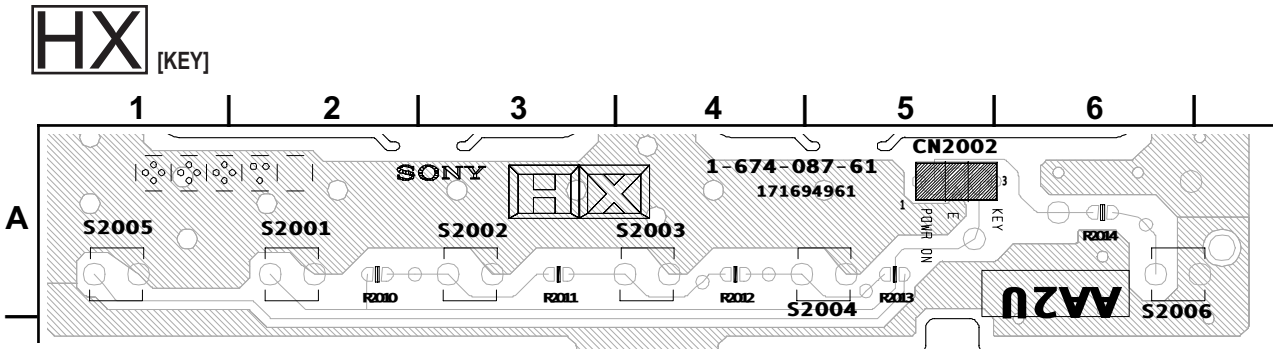

Downloaded from www.Manualslib.com manuals search engine

T BOARD SCHEMATIC DIAGRAM

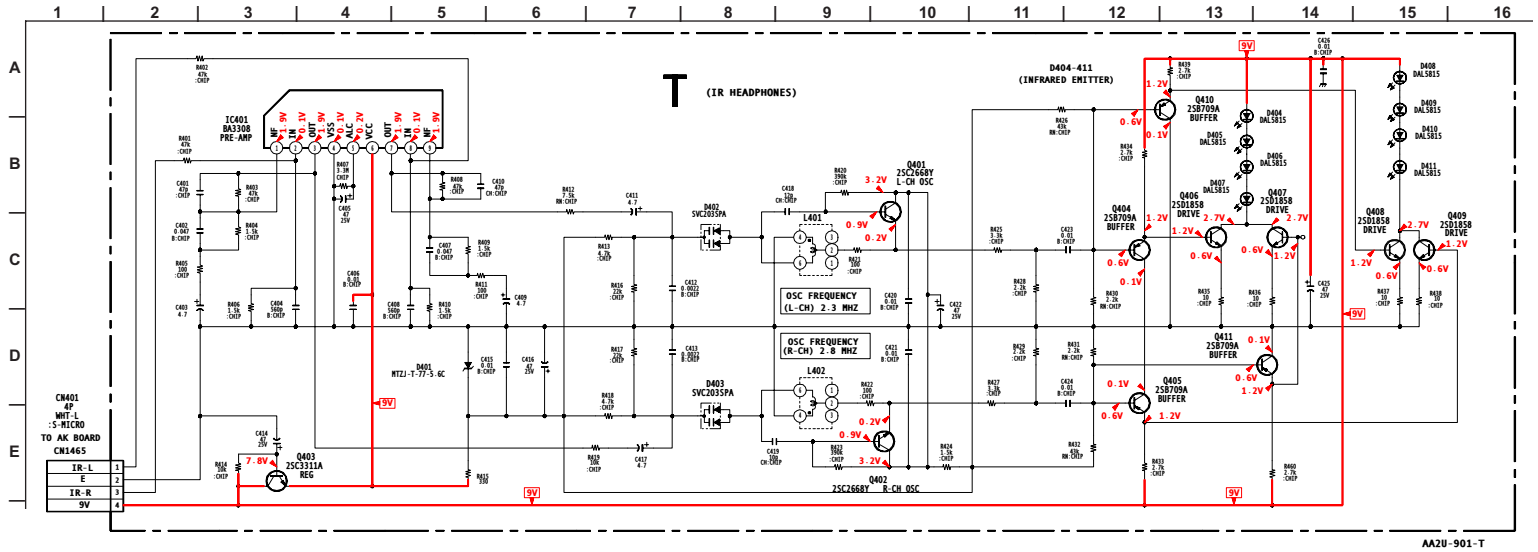

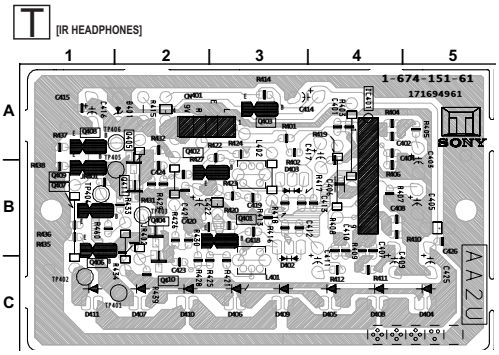

Downloaded from www.Manualslib.com manuals search engine

UX (MAIN) BOARD SCHEMATIC DIAGRAM (KV-32FV27 / 36FV27 ONLY)

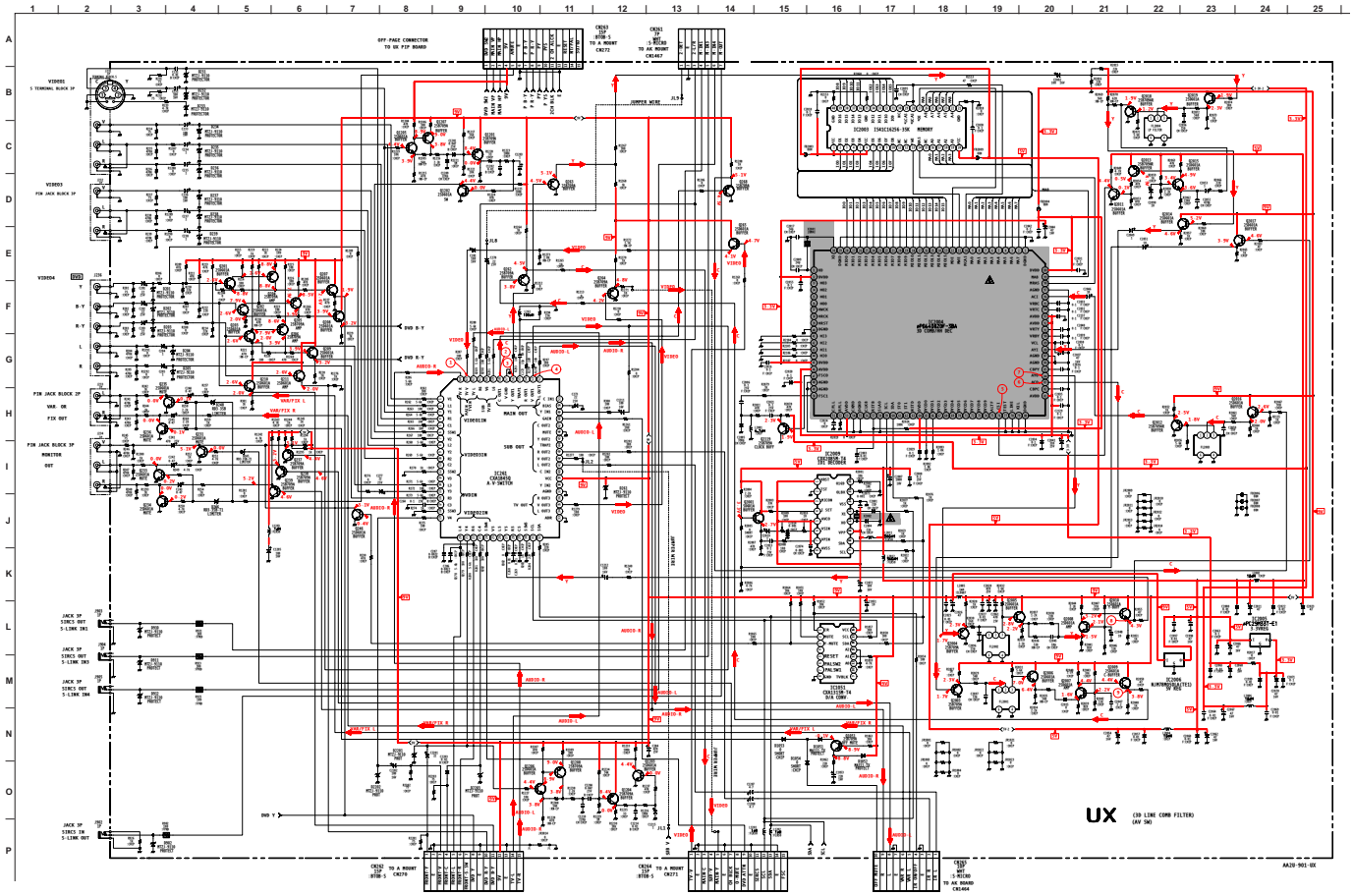

Downloaded from www.Manualslib.com manuals search engine

UX (MAIN) BOARD IC VOLTAGE LIST

IC261	
pin	volt
1	4.5
2	4.5
3	4.5
4	4.5
5	4.5
6	4.5
7	4.5
8	4.5
9	N/C
10	4.5
11	N/C
12	0.0
13	N/C
14	4.5
15	4.5
16	4.5
17	4.5
18	0.0
19	4.5
20	4.5
21	4.5
22	4.5
23	4.5
24	4.5
25	N/C
26	N/C
27	4.5
28	4.5
29	4.5
30	0.0
31	4.7
32	4.7
33	GND
34	N/C
35	4.2
36	N/C
37	GND
38	N/C
39	8.9
40	N/C
41	4.6
42	4.4
43	4.4
44	N/C
45	N/C
46	GND
47	N/C
48	4.5
49	4.5
50	4.5
51	N/C
52	4.6
53	4.4
54	4.6
55	4.4
56	4.4
57	GND
58	4.4
59	4.5
60	4.5
61	4.5
62	4.5
63	4.5
64	4.5

IC1051	
pin	volt
1	8.9
2	8.9
3	0.4
4	N/C
5	N/C
6	N/C
7	N/C
8	GND
9	N/C
10	N/C
11	GND
12	8.9
13	GND
14	4.7
15	4.7
16	8.9

IC2003	
pin	volt
1	5.0
2	1.7
3	1.7
4	1.7
5	1.7
6	1.5
7	1.5

1.6	8	1.5	53	3.3	98	0.5
5.0	9	1.5	54	GND	99	1.7
1.4	10	1.0	55	GND	100	3.3
1.6	11	2.8	56	N/C	IC2005	
1.7	12	2.5	57	4.0	pin	volt
1.0	13	1.3	58	GND	IN	5.0
N/C	14	1.4	59	4.7	OUT	3.3
N/C	15	1.8	60	4.7	GND	GND
2.9	16	1.6	61	N/C	IC2006	
0.5	17	1.6	62	N/C	pin	volt
N/C	18	1.7	63	N/C	IN	8.9
1.5	19	1.7	64	3.3	OUT	5.0
1.5	20	1.7	65	0.0	GND	GND
1.5	21	1.0	66	0.0	IC2009	
1.5	22	1.6	67	N/C	pin	volt
5.0	23	1.5	68	N/C	1	4.8
GND	24	1.5	69	N/C	2	GND
1.7	25	1.5	70	N/C	3	4.8
1.5	26	1.7	71	N/C	4	1.4
1.6	27	1.7	72	N/C	5	4.8
1.6	28	1.7	73	N/C	6	1.8
1.6	29	GND	74	N/C	7	1.6
2.5	30	1.5	75	N/C	8	GND
1.0	31	1.5	76	4.4	9	4.7
1.0	32	3.3	77	GND	10	4.7
N/C	33	N/C	78	GND	11	4.8
1.4	34	N/C	79	GND	12	2.5
1.5	35	N/C	80	GND	13	2.4
1.9	36	N/C	81	3.3	14	GND
1.6	37	N/C	82	1.0	15	0
GND	38	N/C	83	1.7	16	4.8
1.7	39	N/C	84	1.7		
1.7	40	GND	85	1.0		
1.7	41	0.0	86	GND		
1.7	42	0.0	87	GND		
GND	43	0.0	88	2.2		
IC2004	44	0.0	89	0.0		
pin	volt	45	3.3	90	1.0	
1	GND	46	3.3	91	1.0	
2	1.5	47	1.9	92	3.3	
3	1.5	48	GND	93	3.3	
4	1.5	49	GND	94	3.3	
5	1.5	50	1.5	95	3.3	
6	1.5	51	GND	96	0.0	
7	1.5	52	GND	97	GND	

All voltages are in V

UX (MAIN) BOARD WAVEFORMS

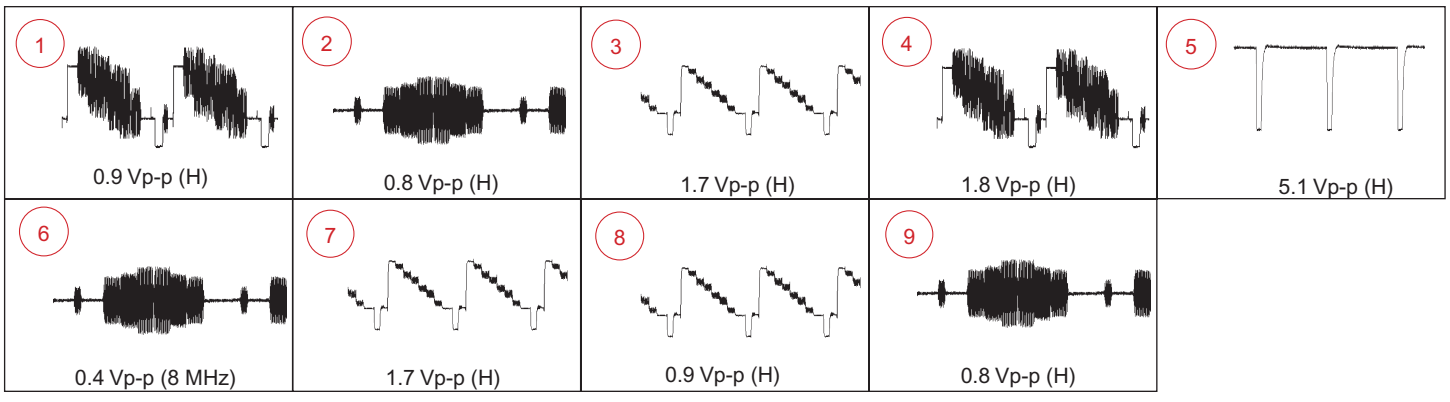

Downloaded from www.Manualslib.com manuals search engine

UX (PIP) BOARD SCHEMATIC DIAGRAM (KV-32FV27 / 36FV27 ONLY)

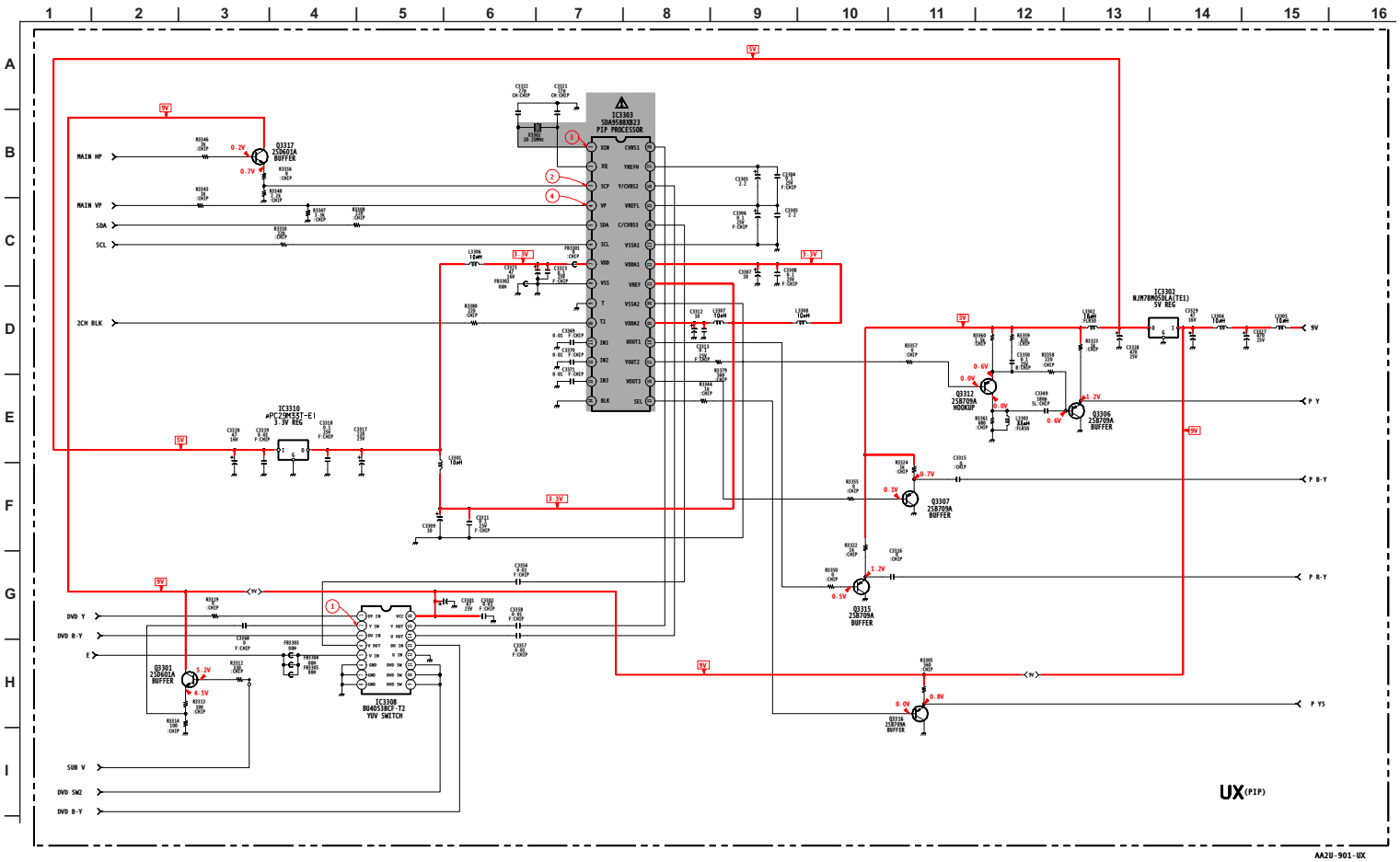

Downloaded from www.Manualslib.com manuals search engine

UX (PIP) BOARD IC VOLTAGE LIST

IC3302		4	4.5	14	GND	24	2.7	4	2.7	14	2.7
pin	volt	5	4.7	15	0.0	25	1.5	5	2.7	15	2.7
IN	8.7	6	4.7	16	0.1	26	2.7	6	GND	16	8.5
OUT	5.1	7	3.3	17	0.0	27	1.5	7	GND	IC3310	
GND	GND	8	GND	18	0.5	28	2.7	8	GND	pin	volt
IC3303		9	GND	19	3.3	IC3308		9	0.3	IN	5.0
pin	volt	10	3.3	20	GND	pin	volt	10	0.3	OUT	3.3
1	3.6	11	1.2	21	3.3	1	3.5	11	0.3	GND	GND
2	3.6	12	1.2	22	3.3	2	2.7	12	GND	All voltages are in V	
3	6.5	13	1.2	23	GND	3	3.2	13	3.2		

UX (PIP) BOARD WAVEFORMS

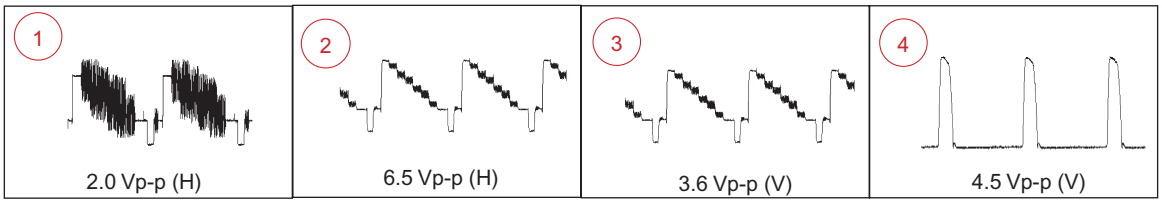

UX BOARD (CONDUCTOR) LOCATOR LIST

DIODE		D2201	D-2	Q236	A-4	Q1206	D-1
D205	D-3	D2202	D-2	Q238	C-4	Q1208	C-2
D245	B-5	D2203	D-2	Q239	C-3	Q2008	I-6
D246	B-3	TRANSISTOR		Q246	B-4	Q2017	H-6
D248	A-3	Q201	D-4	Q262	B-7		
D261	A-5	Q210	C-4	Q263	B-6		
D911	E-2	Q211	C-4	Q265	B-6		
D1051	B-2	Q231	A-4	Q268	C-7		
D1052	A-2	Q233	B-4	Q1051	B-2		
D1053	B-2	Q234	A-3	Q1201	C-6		
D1054	B-2	Q235	A-4	Q1202	C-5		

UX BOARD (COMPONENT) LOCATOR LIST

DIODE		IC		Q205	C-4	Q2009	C-6
D201	G-4	IC261	H-6	Q206	C-4	Q2010	B-6
D202	G-4	IC1051	J-3	Q207	C-5	Q2011	D-5
D203	G-3	IC2003	B-4	Q208	C-3	Q2012	C-5
D204	G-3	IC2004	C-4	Q209	C-3	Q2013	C-5
D231	E-5	IC2005	D-5	Q237	J-4	Q2014	C-5
D232	E-6	IC2006	E-6	Q264	I-6	Q2015	D-5
D233	E-5	IC2009	F-5	Q1203	H-2	Q2016	D-6
D234	E-6	IC3302	B-1	Q1204	G-2	Q2018	D-5
D235	F-5	IC3303	B-3	Q1205	G-6	Q2019	D-4
D236	E-5	IC3308	B-2	Q1207	H-6	Q2119	C-4
D237	G-5	IC3310	B-3	Q2001	G-7	Q3301	B-3
D238	G-5	TRANSISTOR		Q2003	C-5	Q3306	B-1
D239	G-5	Q201	D-4	Q2004	B-5	Q3307	B-1
D902	I-2	Q202	C-3	Q2005	B-6	Q3312	B-1
D910	E-2	Q203	C-3	Q2006	C-6	Q3315	B-2
D912	G-2	Q204	C-4	Q2007	C-6	Q3316	B-2
						Q3317	C-2

Downloaded from www.Manualslib.com manuals search engine

UX [AV SW, 3D LINE COMB FILTER, PIP]

Component Side (KV-32FV27 / 36FV27 ONLY)

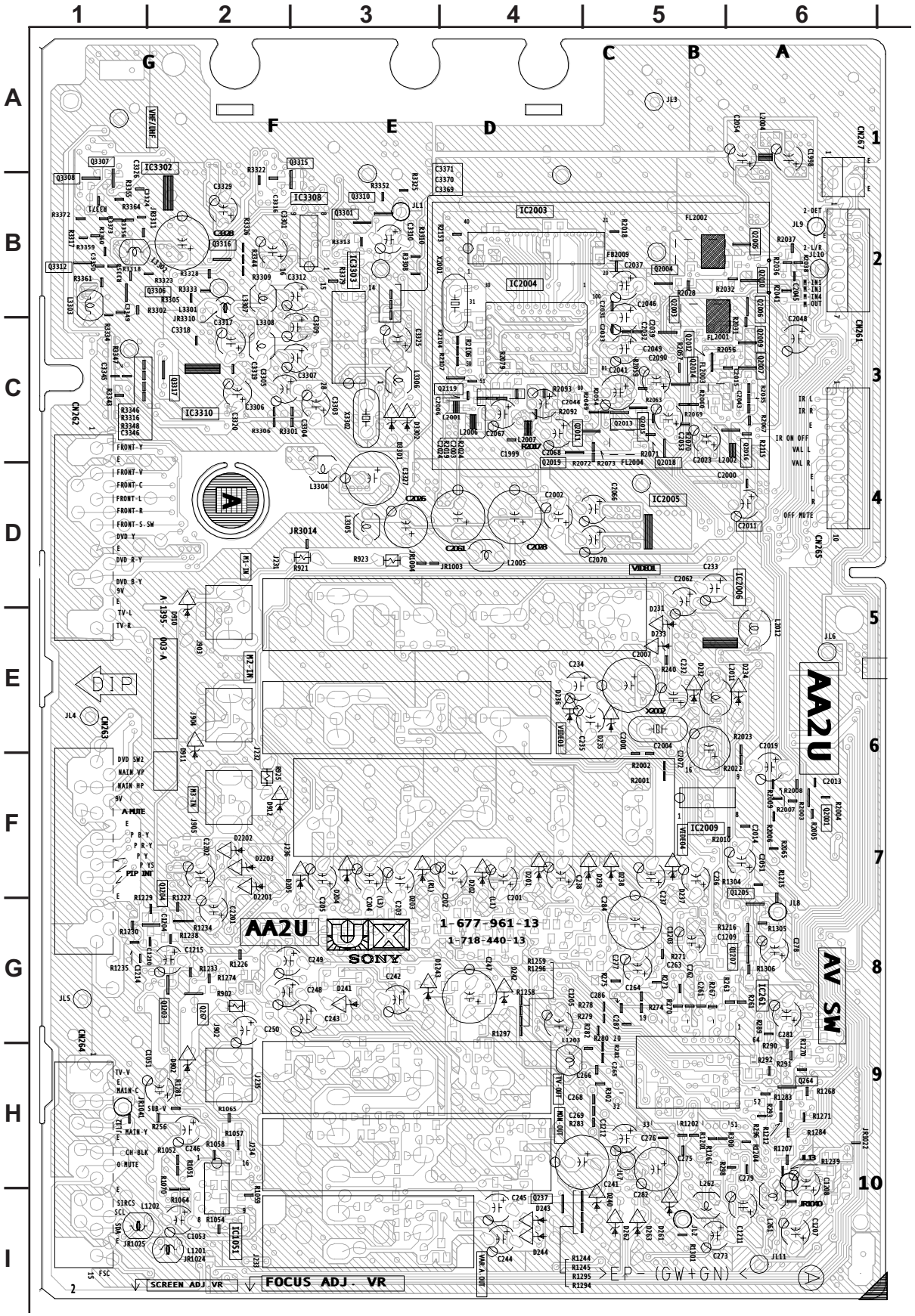

Downloaded from www.Manualslib.com manuals search engine

UX [AV SW, 3D LINE COMB FILTER, PIP]

Conductor Side (KV-32FV27 / 36FV27 ONLY)

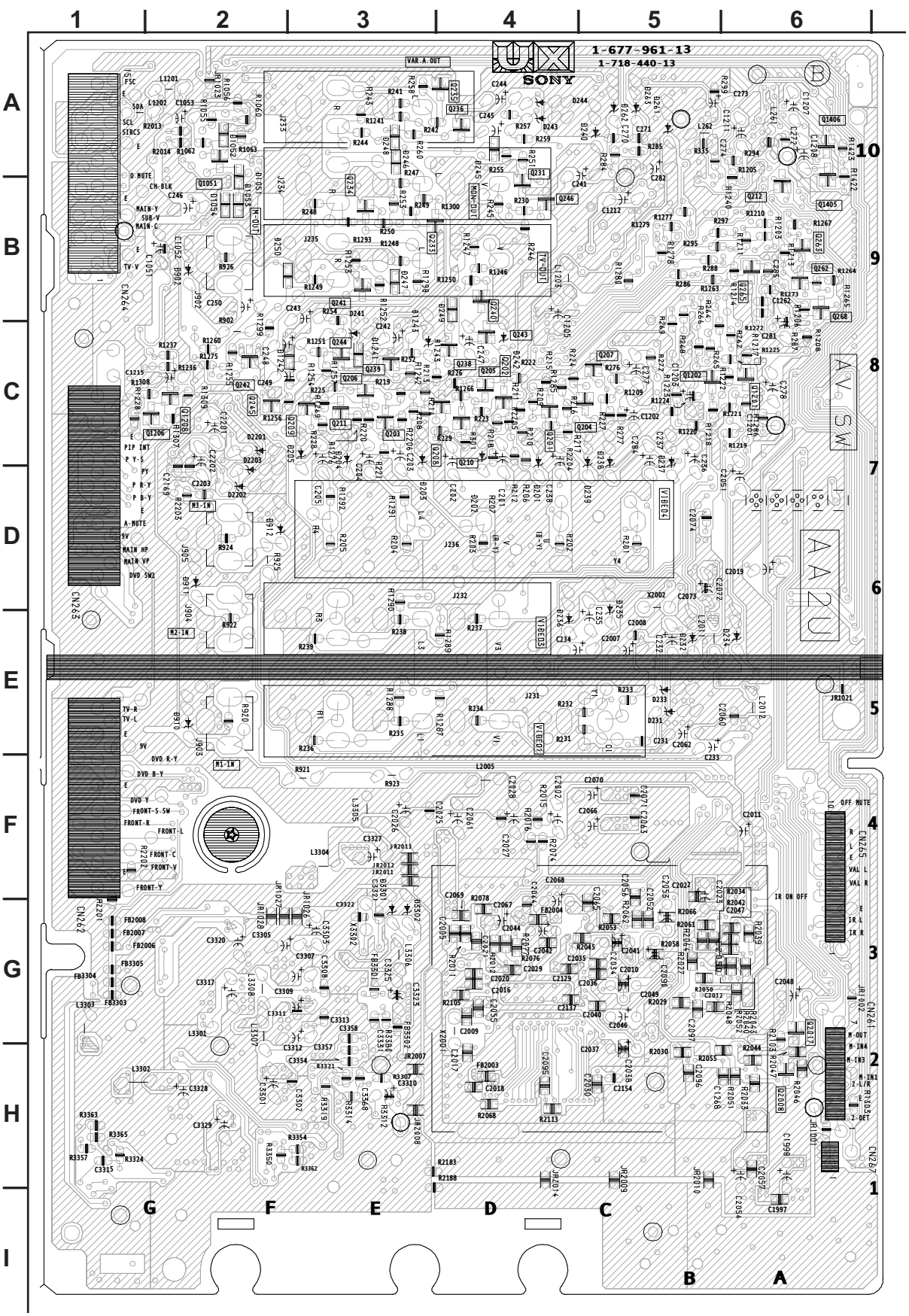

Downloaded from www.Manualslib.com manuals search engine

UY (MAIN) BOARD SCHEMATIC DIAGRAM (KV-36FS13 / 36FS17 / 38FS17 ONLY)

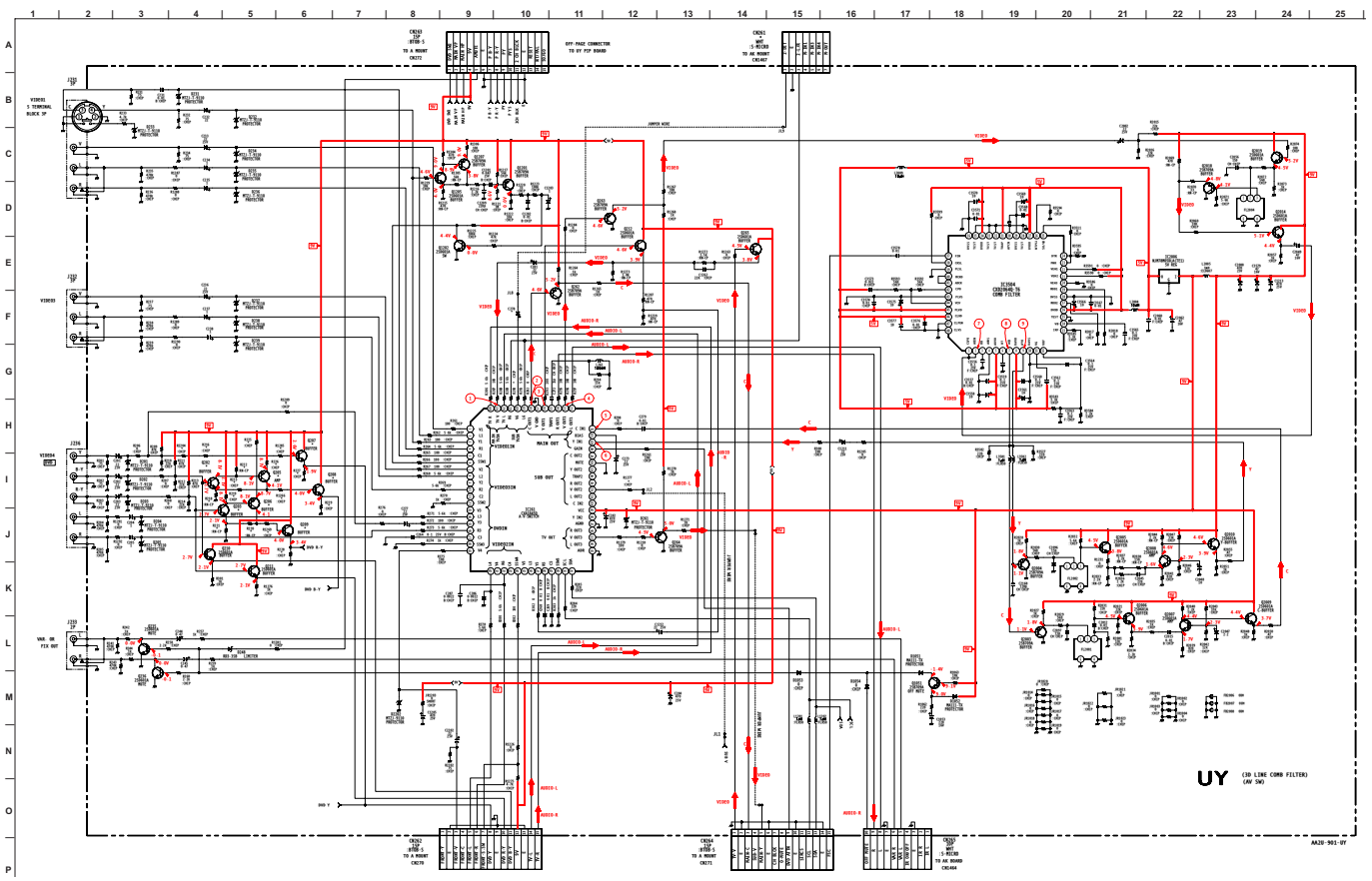

Downloaded from www.Manualslib.com manuals search engine

UY (MAIN) BOARD WAVEFORMS

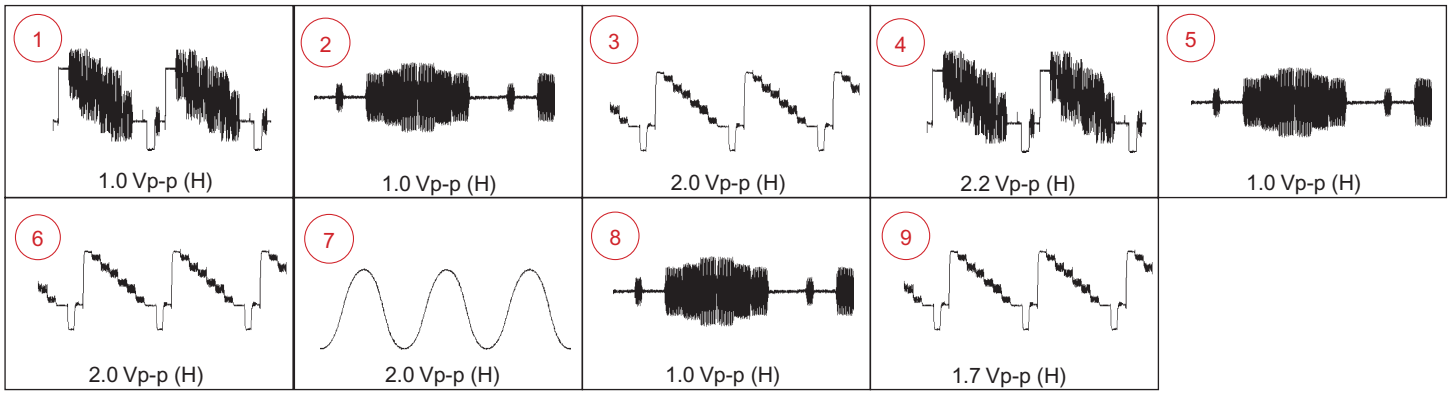

(*) UY (MAIN) BOARD VARIANT MODEL LIST

REF. NO.	LOCATION	KV-36FS13	KV-36FS17/38FS17	REF. NO.	LOCATION	KV-36FS13	KV-36FS17/38FS17
C278	E-8	#	22µF	R222	G-4	#	1K
CN261	A-11	#	7P	R223	G-4	#	100
Q202	G-3	#	2SD601A-QRS-TX	R225	G-4	#	100
Q203	H-4	#	2SD601A-QRS-TX	R226	G-4	#	100
Q205	G-4	#	2SB709A-QRS-TX	R227	G-5	#	470
Q206	H-4	#	2SB709A-QRS-TX	R228	H-5	#	1K
Q207	G-5	#	2SD601A-QRS-TX	R229	H-5	#	1K
Q208	G-5	#	2SD601A-QRS-TX	R290	F-8	#	100
Q209	H-5	#	2SD601A-QRS-TX	R1266	G-4	#	470
R216	G-3	#	100	R1269	H-4	#	470
R218	G-3	#	470	R1277	G-9	#	100
R219	G-4	#	1K	R1285	G-4	#	470
R220	H-4	#	100	R2204	G-3	#	0
R221	H-4	#	470				

NOTE: # = Not Mounted

UY (MAIN) BOARD IC VOLTAGE LIST

IC261		21	N/C	43	N/C	IC2006		16	4.8	38	4.8
pin	volt	22	4.5	44	N/C	pin	volt	17	0.3	39	GND
1	4.5	23	N/C	45	N/C	IN	9.0	18	GND	40	2.2
2	4.5	24	7.9	46	GND	OUT	4.9	19	0.3	41	2.2
3	4.5	25	N/C	47	N/C	GND	GND	20	GND	42	3.3
4	4.5	26	N/C	48	4.5	IC3504		21	4.8	43	GND
5	4.5	27	4.5	49	4.5	pin	volt	22	4.8	44	3.3
6	4.5	28	4.5	50	4.5	1	1.4	23	GND	45	4.8
7	4.5	29	4.5	51	4.5	2	1.4	24	GND	46	4.8
8	4.5	30	0.0	52	4.6	3	0.5	25	GND	47	GND
9	N/C	31	4.7	53	4.4	4	GND	26	GND	48	GND
10	4.5	32	4.7	54	4.6	5	4.8	27	4.8		
11	N/C	33	GND	55	4.4	6	2.6	28	GND		
12	0.0	34	N/C	56	4.4	7	1.0	29	GND		
13	N/C	35	4.2	57	GND	8	4.8	30	GND		
14	4.5	36	N/C	58	4.4	9	1.0	31	4.8		
15	4.5	37	GND	59	4.5	10	GND	32	GND		
16	4.5	38	N/C	60	4.5	11	2.7	33	GND		
17	4.5	39	9.0	61	4.5	12	2.0	34	4.8		
18	0.0	40	N/C	62	4.5	13	2.0	35	GND		
19	4.5	41	N/C	63	4.5	14	1.0	36	GND		
20	4.5	42	4.4	64	4.5	15	GND	37	2.3		

All voltages are in V

Downloaded from www.Manualslib.com manuals search engine

UY (PIP) BOARD SCHEMATIC DIAGRAM (KV-36FS17 / 38FS17 ONLY)

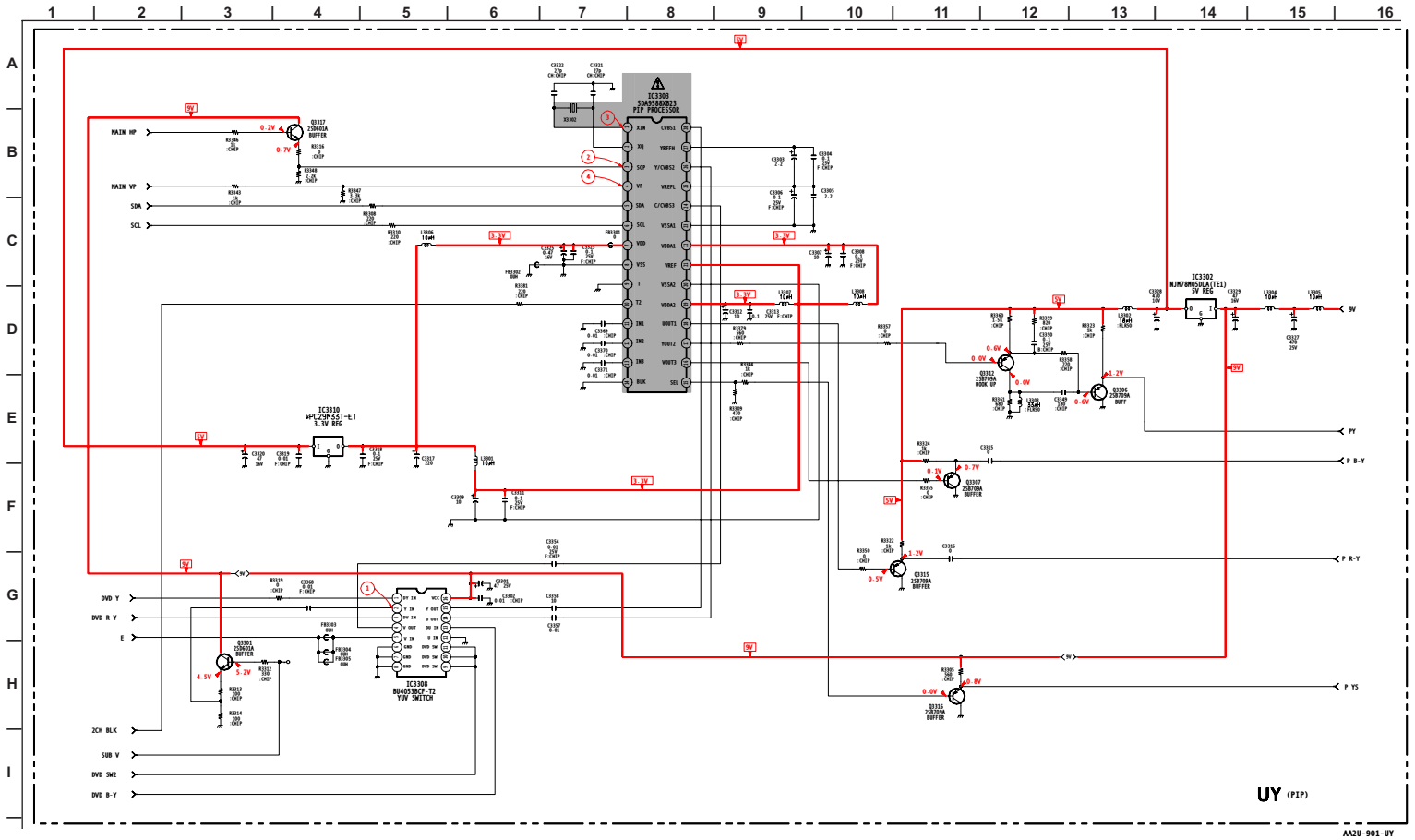

Downloaded from www.Manualslib.com manuals search engine

(*) UY (PIP) BOARD VARIANT MODEL LIST (KV-36FS17 / 38FS17 ONLY)

REF. NO.	LOCATION	KV-36FS13	KV-36FS17/38FS17	REF. NO.	LOCATION	KV-36FS13	KV-36FS17/38FS17
C3301	F-5	#	47µF 25V	L3301	D-5	#	10µH
C3302	F-5	#	.01µF	L3302	D-12	#	18µH
C3303	B-8	#	2.2µF	L3303	D-11	#	33µH
C3304	B-9	#	.1µF 25V	L3304	C-13	#	10µH
C3305	B-9	#	2.2µF	L3305	C-13	#	10µH
C3306	B-8	#	.1µF 25V	L3306	C-5	#	10µH
C3307	C-9	#	10µF	L3307	C-8	#	10µH
C3308	C-9	#	.1µF 25V	L3308	C-8	#	10µH
C3309	E-5	#	10µF	Q3301	G-3	#	2SD601A-QRS-TX
C3311	E-5	#	.1µF 25V	Q3306	D-12	#	2SB709A-QRS-TX
C3312	D-8	#	10µF	Q3307	E-10	#	2SB709A-QRS-TX
C3313	D-8	#	.1µF 25V	Q3312	D-10	#	2SB709A-QRS-TX
C3315	E-10	#	0	Q3315	F-9	#	2SB709A-QRS-TX
C3316	F-10	#	0	Q3316	H-10	#	2SB709A-QRS-TX
C3317	E-5	#	220µF 25V	Q3317	B-3	#	2SD601A-QRS-TX
C3318	E-4	#	.1µF 25V	R3305	G-10	#	560
C3319	E-3	#	.01µF	R3308	B-4	#	220
C3320	E-3	#	47µF 16V	R3309	D-8	#	470
C3321	A-6	#	27PF	R3310	C-4	#	220
C3322	A-6	#	27PF	R3312	G-3	#	330
C3323	C-6	#	.1µF 25V	R3313	G-2	#	100
C3325	C-6	#	47µF 16V	R3314	G-2	#	100
C3327	D-13	#	470µF 25V	R3316	B-3	#	0
C3328	C-12	#	470µF 10V	R3319	F-3	#	0
C3329	C-13	#	47µF 16V	R3322	F-9	#	1K
C3349	D-11	#	180PF	R3323	D-11	#	1K
C3350	D-11	#	.1µF 25V	R3324	E-10	#	1K
C3354	F-6	#	.01µF	R3343	B-3	#	1K
C3357	G-6	#	.01µF	R3344	D-8	#	1K
C3358	G-6	#	.01µF	R3346	B-3	#	1K
C3368	F-3	#	0	R3347	B-4	#	3.3K
C3369	D-6	#	.01µF	R3348	B-3	#	2.2K
C3370	D-6	#	.01µF	R3350	F-9	#	0
C3371	D-6	#	.01µF	R3355	E-9	#	0
FB3301	C-7	#	0	R3357	D-9	#	0
FB3302	C-6	#	0µH	R3358	D-11	#	220
FB3303	G-4	#	0µH	R3359	D-11	#	820
FB3304	G-4	#	0µH	R3360	D-11	#	1.5K
IC3302	C-13	#	NJM78M05DLA (TE1)	R3361	D-10	#	680
IC3303	A-7	#	SDA9588XB23	R3379	D-8	#	560
IC3308	F-5	#	BU4053BCF-T2	R3381	C-6	#	220
IC3310	E-4	#	UPC29M33T-E1	X3302	A-6	#	1-781-929-21

NOTE: # = Not Mounted

UY (PIP) BOARD WAVEFORMS (KV-36FS17 / 38FS17 ONLY)

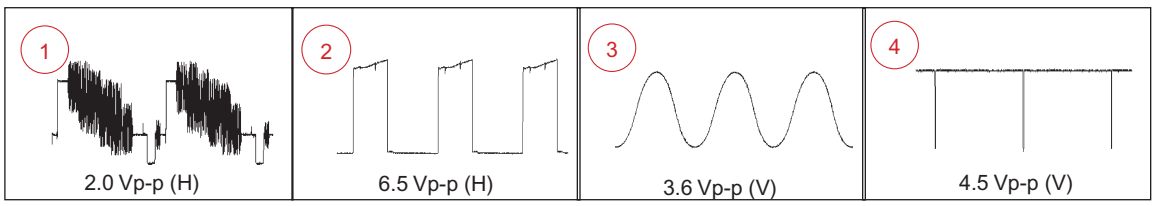

Downloaded from www.Manualslib.com manuals search engine

UY (PIP) BOARD IC VOLTAGE LIST (KV-36FS17 / 38FS17 ONLY)

IC3302		4	4.5	14	GND	24	2.7	4	2.7	14	2.7
pin	volt	5	4.7	15	0.0	25	1.5	5	2.7	15	2.7
IN	8.7	6	4.7	16	0.1	26	2.7	6	GND	16	8.5
OUT	5.1	7	3.3	17	0.0	27	1.5	7	GND	IC3310	
GND	GND	8	GND	18	0.5	28	2.7	8	GND	pin	volt
IC3303		9	GND	19	3.3	IC3308		9	0.3	IN	5.0
pin	volt	10	3.3	20	GND	pin	volt	10	0.3	OUT	3.3
1	3.6	11	1.2	21	3.3	1	3.5	11	0.3	GND	GND
2	3.6	12	1.2	22	3.3	2	2.7	12	GND	All voltages are in V	
3	6.5	13	1.2	23	GND	3	3.2	13	3.2		

UY BOARD (COMPONENT) LOCATOR LIST

DIODE		IC		Q2005	B-6
D201	G-4	IC261	H-6	Q2006	C-6
D202	G-4	IC2006	E-6	Q2007	C-6
D203	G-3	IC3302	B-1	Q2009	C-6
D204	G-3	IC3303	B-3	Q2010	B-6
D231	E-5	IC3308	B-2	Q2014	C-5
D232	E-6	IC3310	B-3	Q2018	D-5
D233	E-5	IC3504	B-4	Q2019	D-4
D234	E-6	TRANSISTOR		Q3301	B-3
D235	F-5	Q264	I-6	Q3307	B-1
D236	E-5	Q1205	G-6	Q3312	B-1
D237	G-5	Q1207	H-6	Q3315	B-2
D238	G-5	Q2003	C-5	Q3316	B-2
D239	G-5	Q2004	B-5	Q3317	C-2

UY BOARD (CONDUCTOR) LOCATOR LIST

DIODE		TRANSISTOR		Q211	C-4	Q1202	C-5
D205	D-3	Q202	C-4	Q212	B-6	Q2008	I-6
D248	A-3	Q203	D-3	Q235	A-4	Q3306	B-1
D261	A-3	Q205	C-4	Q236	A-4		
D1051	B-2	Q206	C-3	Q262	B-7		
D1052	A-2	Q207	C-5	Q263	B-6		
D1053	B-2	Q208	D-3	Q265	B-6		
D1054	B-2	Q209	C-2	Q1051	B-2		
D2202	D-2	Q210	D-4	Q1201	C-6		

Downloaded from www.Manualslib.com manuals search engine

UY

[3D LINE COMB FILTER, AV SW, PIP]

Component Side (KV-36FS13 / 36FS17 / 38FS17 ONLY)

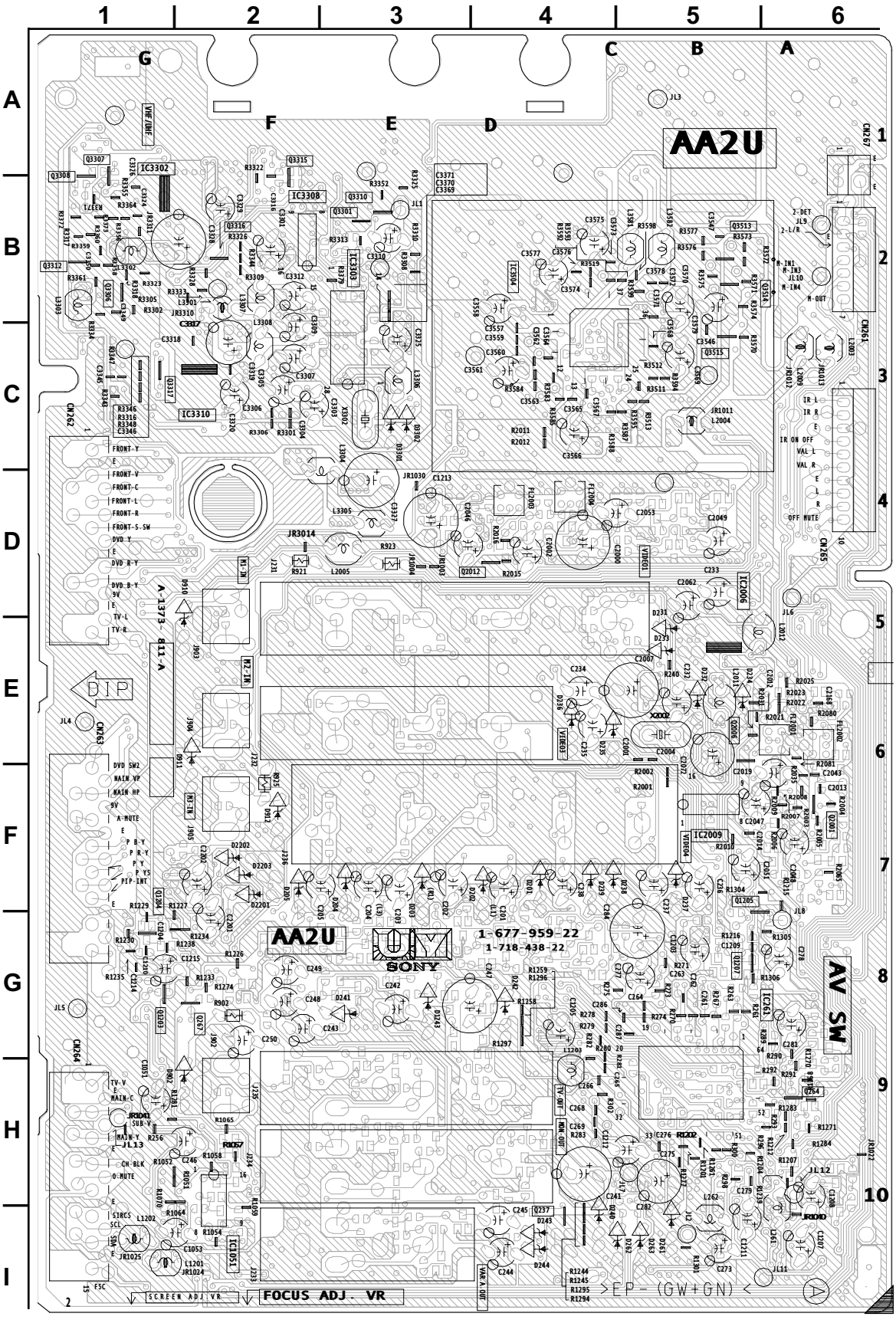

Downloaded from www.Manualslib.com manuals search engine

UY [3D LINE COMB FILTER, AV SW, PIP]

Conductor Side (KV-36FS13 / 36FS17 / 38FS17 ONLY)

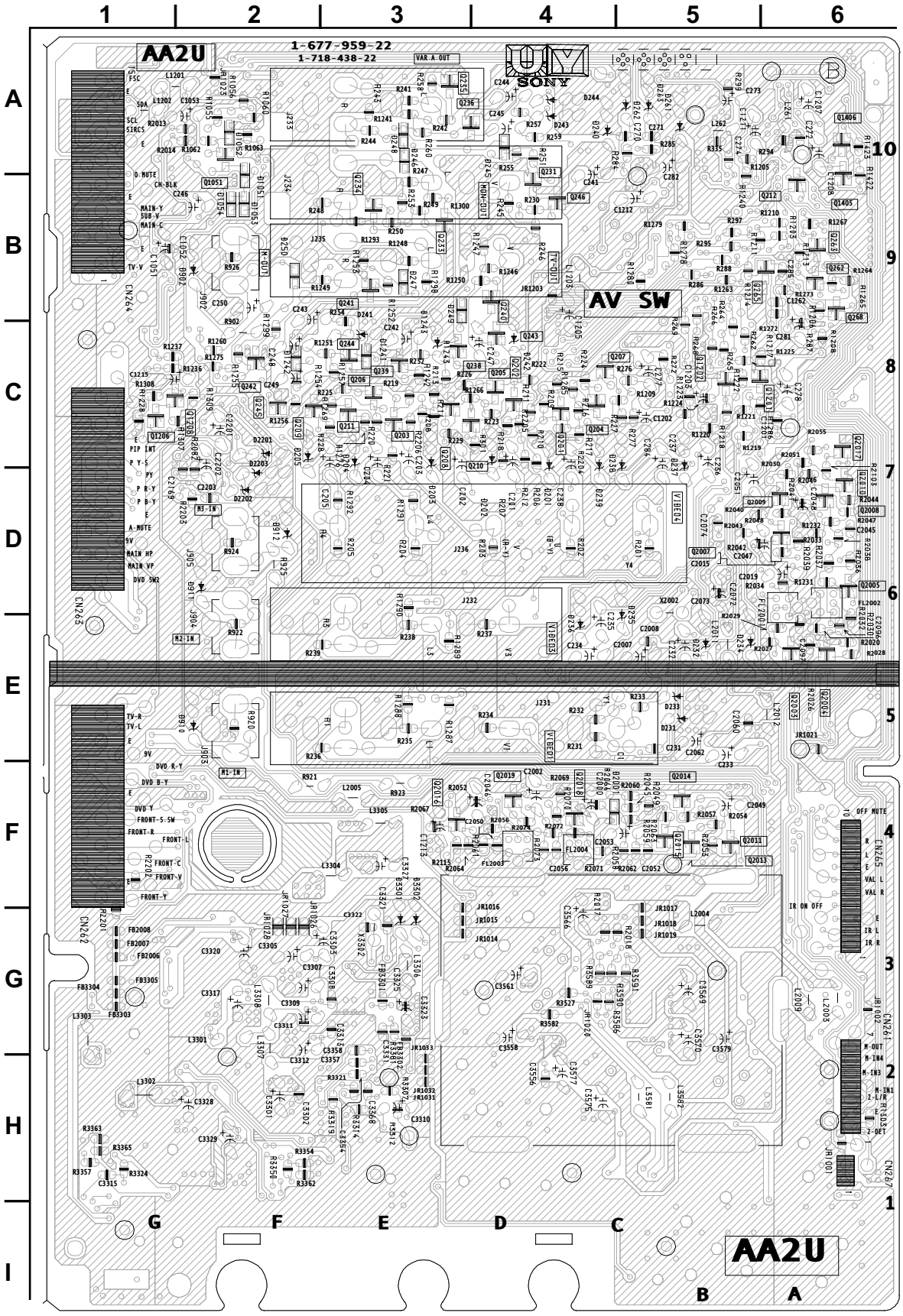

Downloaded from www.Manualslib.com manuals search engine

WA BOARD SCHEMATIC DIAGRAM

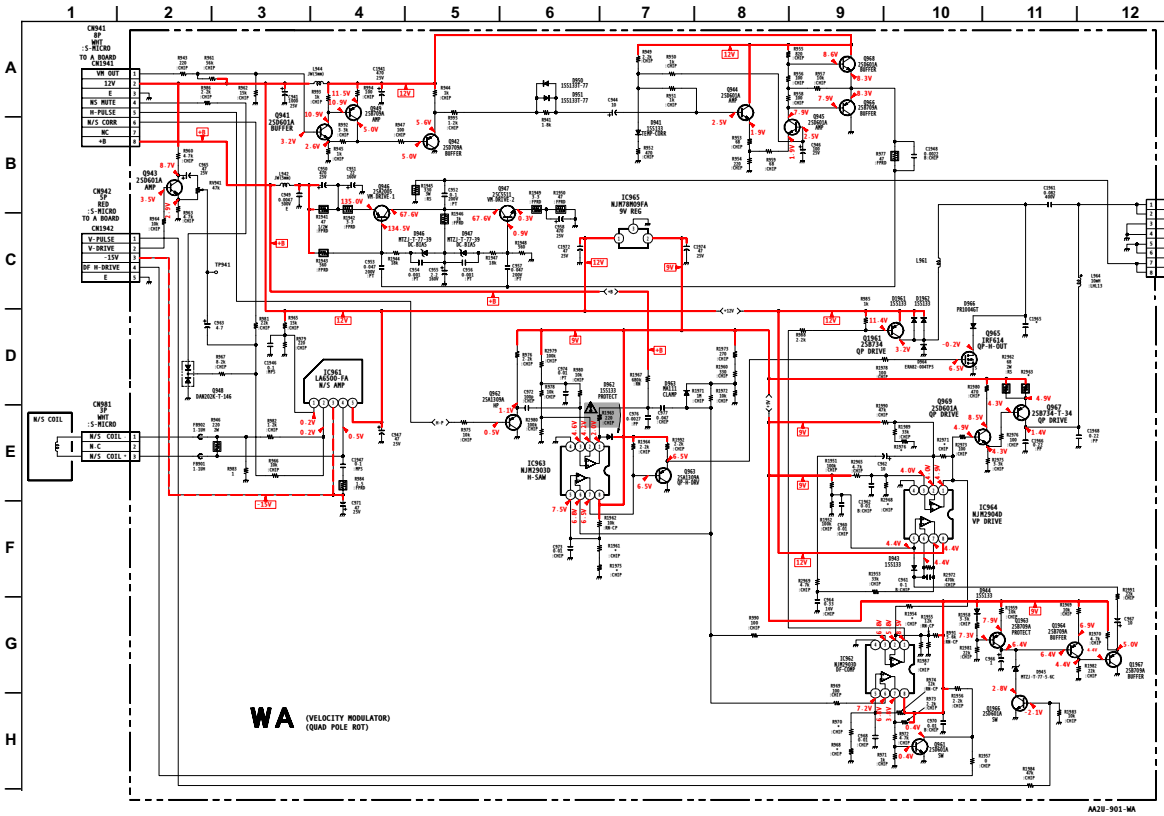

(*) WA BOARD VARIANT MODEL LIST

REF. NO.	LOCATION	KV-32FV27	KV-36FS13/ 36FS17/ 38FS17/ 36FV27
C1965	D-11	0.01µF 630V	0.022µF 630V
R968	H-9	3.3K	6.8K
R970	H-9	47K	39K
R1954	G-10	47K RES-CHIP	47K METAL CHIP
R1961	F-6	56K	39K
R1975	F-6	4.7K	6.8K
R1976	E-9	3.3K RES-CHIP	3.3K METAL CHIP
R1987	G-10	100K	33K
R2963	D-11	68 2W	#
R2968	E-9	4.7K	3.3K
R2971	E-10	47K	68K

NOTE: # = Not Mounted

Downloaded from www.Manualslib.com manuals search engine

WA [VELOCITY MODULATOR, QUAD POLE ROTATE]

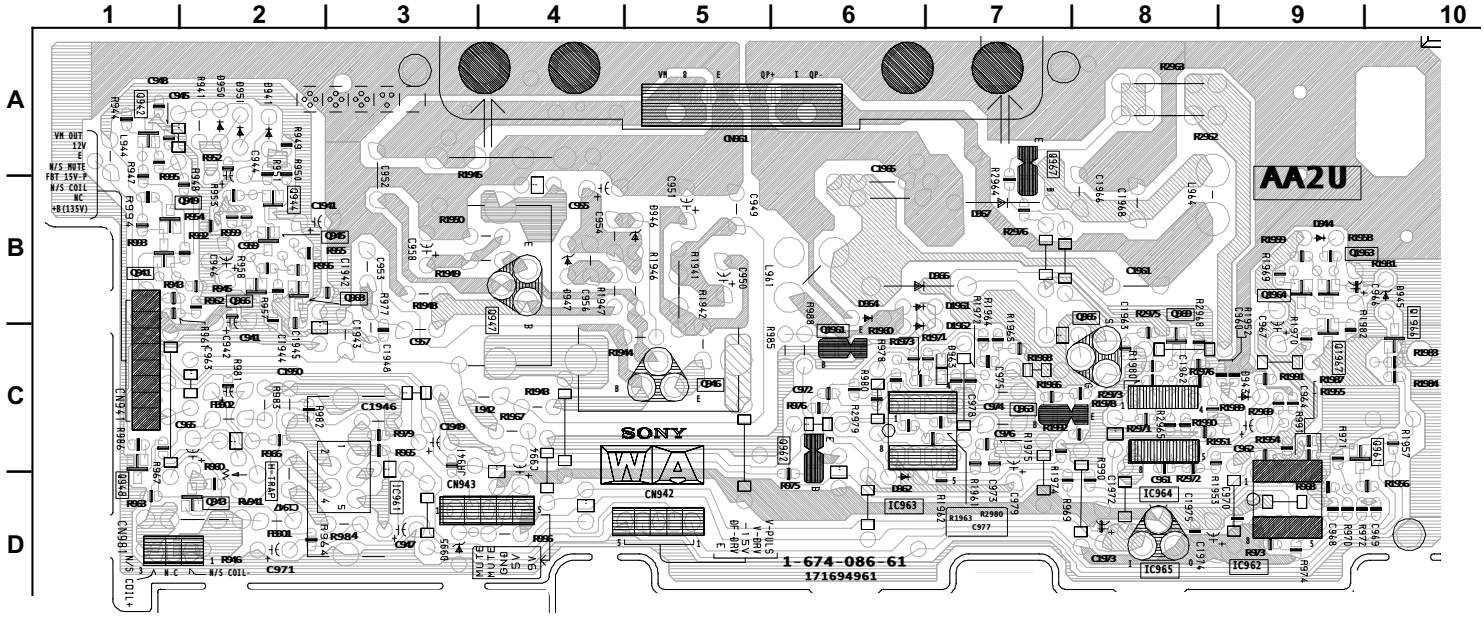

Downloaded from www.Manualslib.com manuals search engine

5-4. SEMICONDUCTORS

D1NL20U-TA2 PR1004GT
EL1Z-V1
ERA22-08TP3
ERC06-15S
ERD29-08J
EZ0150AV1
ERB44-06TP1
MTZJ-77-22B
1N4003GA
ER204
MTZJ-T-9110

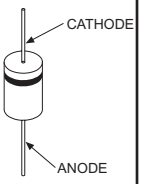

D1NS4-TA2 MTZJ-T-77-6.8B
D120R-TA
ERA38-06TP1
ERA82-004TP5
MTZJ-T-77-10B
MTZJ-T-77-15
MTZJ-T-77-39
MTZJ-T-77-11B
MTZJ-T-77-15B
MTZJ-T-77-24B
MTZJ-T-77-33A

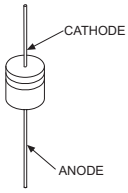

D10SC4M

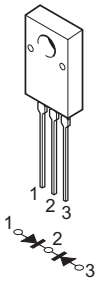

2SC4159-E

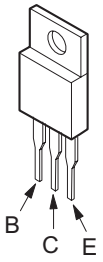

2SC3209LK-TP
2SB734-T-34

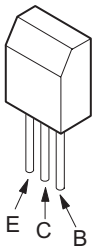

D4SB60L-F
D1NL40-TA2

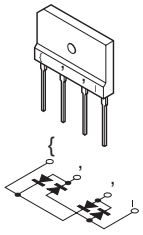

MA111-TX
RD.3SB-T1
P6KE6.8A

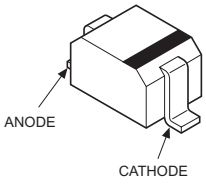

CXA1845q-64PIN

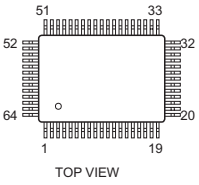

BH3868FS-E2

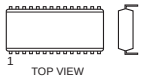

2SB709A-QRS-TX
2SD601A-QRS-TX
DTC114EKA-T146

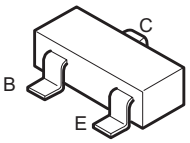

DM-58

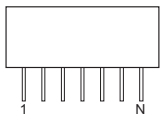

MARKING SIDE VIEW

pin 1 ~N

Mt (one side, both side)

TA1226N
TDA7467-D013TR
CSA213CS

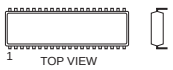

BA3308

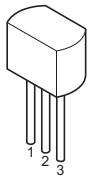

NJM4558M-TE2

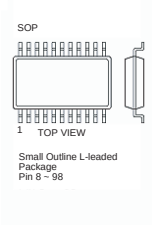

NJM78M09FA

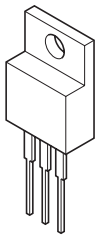

2SA1309A-QRSTA
2SC3311A-QRSTA
2SD1858-Q-TV2

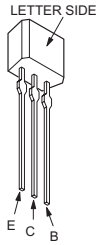

2SC2668-YTP
2SD2144S-TP-V

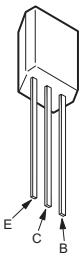

IRF614

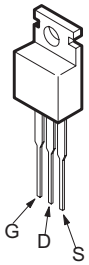

NJM2903D CXA1315M-T4
NJM2903M-TE2 NJM2145M-TE2
NJM2904D CSD2064Q-T6
BU4053BCF-T2 CXA2039M-T6

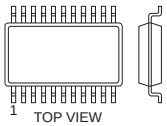

ERC06-15S
MTZJ-T-77-5.1C
MTZJ-T-77-5.6C
MTZJ-T-77-7.5X

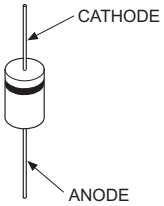

24SBS6-F

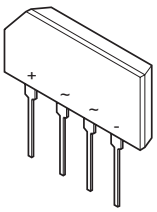

2DAL5815

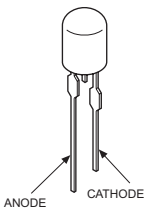

SVC203SPA-AL

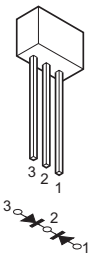

DAN202K

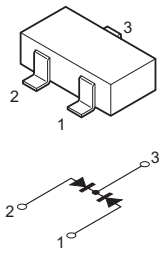

Downloaded from www.Manualslib.com manuals search engine

SECTION 6: EXPLODED VIEWS

Components not identified by a part number or description are not stocked because they are seldom required for routine service.

The component parts of an assembly are indicated by the reference numbers in the far right column of the parts list and within the dotted lines of the diagram.

*** Items marked with an asterisk are not stocked since they are seldom required for routine service. Expect some delay when ordering these components.**

NOTE: The components identified by shading and ⚠ mark are critical for safety. Replace only with part number specified.

NOTE: Les composants identifies par un trame et une marque ⚠ sont critiques pour la securite. Ne les remplacer que par une piece portant le numero specifie.

6-1. CHASSIS (KV-36FS13/36FS17/38FS17 ONLY)

● 7-685-648-91 SCREW +BVTP 3X12 TYPE 2 TT(B)
■ 7-685-663-79 SCREW +BVTP 4X16 TYPE 2 IT-3
▲ 4-388-477-02 SCREW 3X16, TAPPING, +BV WASHER

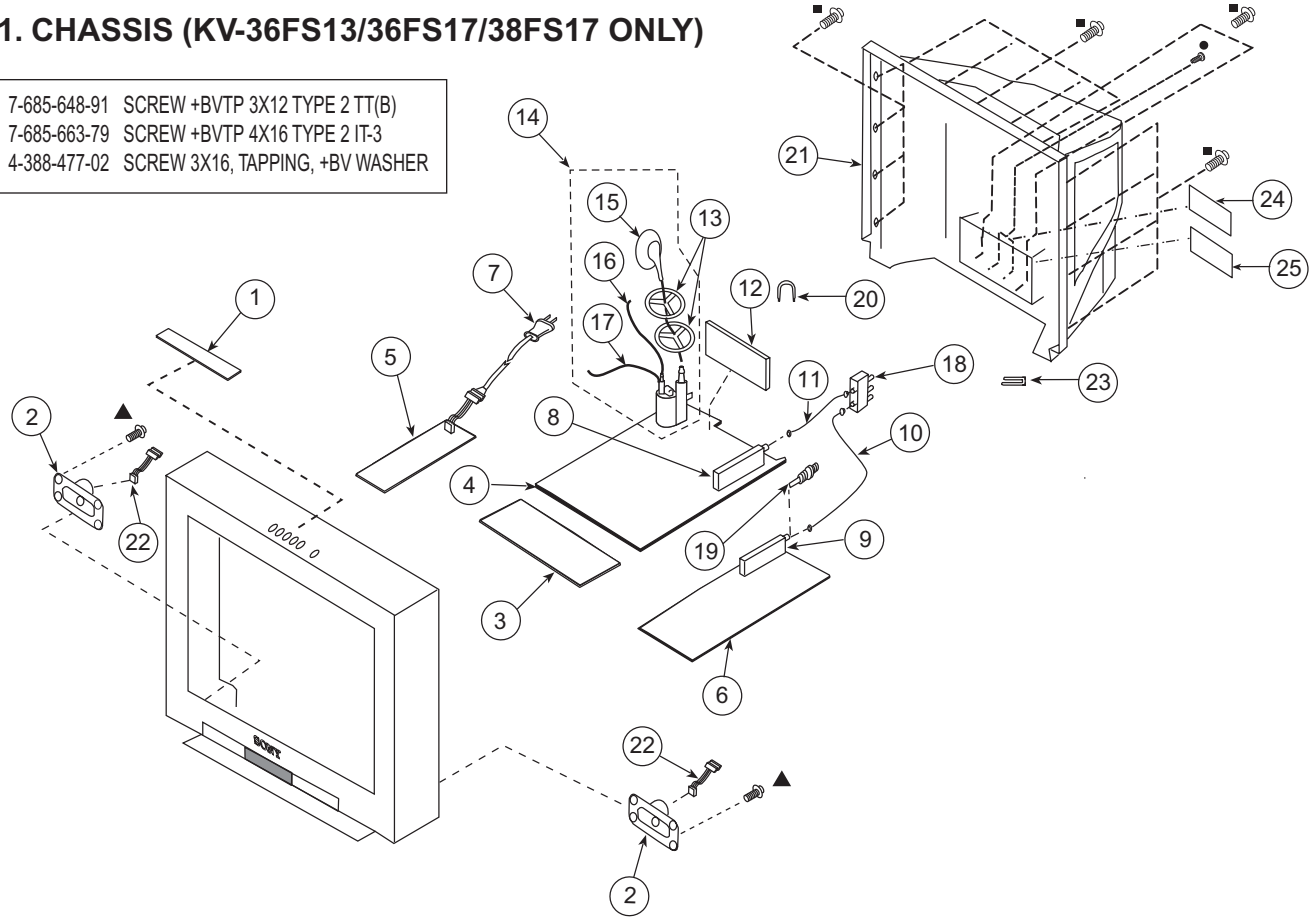

	REF.NO.	PART NO.	DESCRIPTION
*	1	A-1372-636-A	HX MOUNTED PC BOARD
	2	1-544-858-11	SPEAKER
*	3	A-1372-822-A	HS MOUNTED PC BOARD
*	4	A-1299-467-A	A COMPLETE PC BOARD
			The high-voltage leads associated with the FBT on this board are not included and must be ordered separately. [See items 15-17]
*	5	A-1316-397-A	G COMPLETE PC BOARD
*	6	A-1299-489-A	AK COMPLETE PC BOARD (KV-36FS13 ONLY)
*	6	A-1299-468-A	AK COMPLETE PC BOARD (KV-36FS17/38FS17 ONLY)
⚠	7	1-790-316-41	CORD, AC POWER (WITH CONNECTOR)
⚠	8	8-598-542-20	TUNER FSS-BTF-WA412
⚠	9	8-598-501-90	TUNER FSS-BTF-FA402 (KV-36FS17 ONLY)
	10	1-556-945-21	CABLE, P-P (KV-36FS17/38FS17 ONLY)
*	11	1-557-056-31	CABLE, P-P (KV-36FS17/38FS17 ONLY)
*	12	A-1395-031-A	UY COMPLETE PC BOARD (KV-36FS13 ONLY)
*	12	A-1395-027-A	UY COMPLETE PC BOARD (KV-36FS17/38FS17 ONLY)

	REF.NO.	PART NO.	DESCRIPTION	[Assembly Includes]
	13	3-704-372-71	HOLDER, HV CABLE	
⚠	14	1-453-338-21	FBT ASSY NX-4600	[15-17]
⚠	15	1-251-715-22	HV CAP ASSY	
⚠	16	1-900-805-19	FOCUS LEAD	
⚠	17	1-900-805-22	G2 LEAD	
	18	1-771-787-11	SWITCH, RF ANTENNA (KV-36FS17/38FS17 ONLY)	
	19	1-766-374-11	PLUG, F-PIN (KV-36FS13 ONLY)	
*	20	4-076-951-01	HINGE, PWB	
	21	4-076-073-03	COVER, REAR	
			The labels associated with the rear cover are not included and must be ordered separately. [See items 24-25.]	
	22	1-900-805-21	CONNECTOR, SPEAKER	
	23	4-080-328-01	HOOK, AC CORD	
	24	4-070-353-01	LABEL, TUNER TERMINAL (Except KV-36FS13)	
	24	4-070-354-01	LABEL, BLANK TERMINAL (KV-36FS13 ONLY)	
	25	4-076-655-11	LABEL, TERMINAL (KV-36FS13 ONLY)	
	25	4-076-655-01	LABEL, TERMINAL (KV-36FS17/38FS17 ONLY)	

Downloaded from www.Manualslib.com manuals search engine

NOTE: The components identified by shading and ⚠ mark are critical for safety. Replace only with part number specified.

NOTE: Les composants identifies par un trame et une marque ⚠ sont critiques pour la securite. Ne les remplacer que par une piece portant le numero specifie.

6-2 . CHASSIS (KV-32FV27/36FV27 ONLY)

● 7-685-648-91 SCREW +BVTP 3X12 TYPE 2 TT(B)
■ 7-685-663-79 SCREW +BVTP 4X16 TYPE 2 IT-3
▲ 4-388-477-02 SCREW 3X16, TAPPING, +BV WASHER

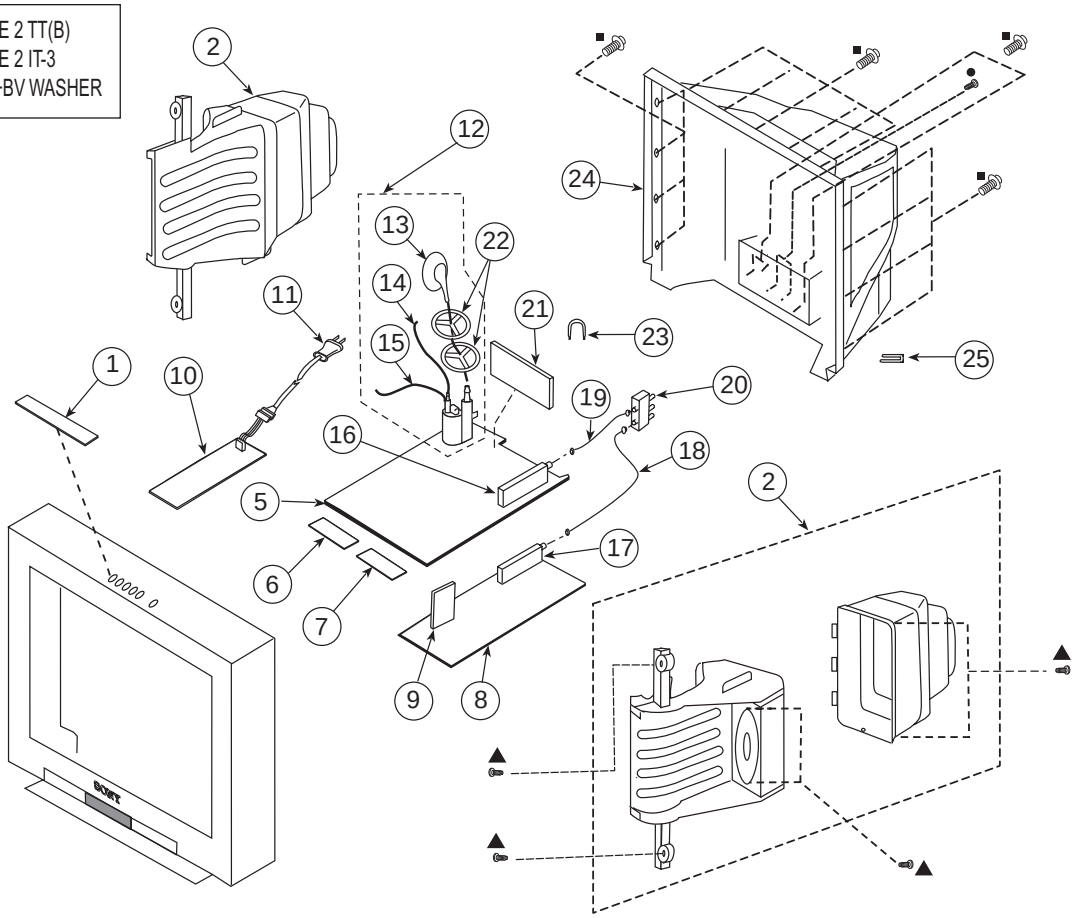

	REF.NO.	PART NO.	DESCRIPTION	[Assembly Includes]
*	1	A-1372-636-A	HX MOUNTED PC BOARD	
*	2	1-529-358-21	SPEAKER, BOX (5,10CM)	
*	5	A-1299-467-A	A COMPLETE PC BOARD (KV-36FV27 ONLY)	
	5	A-1299-476-A	A COMPLETE PC BOARD (KV-32FV27 ONLY)	
		The high-voltage leads associated with the FBT on this board are not included and must be ordered separately. [See item 13-15]		
*	6	A-1372-634-A	HA MOUNTED PC BOARD	
*	7	A-1372-635-A	HB MOUNTED PC BOARD	
*	8	A-1299-469-A	AK COMPLETE PC BOARD	
*	9	A-1394-934-A	T COMPLETE PC BOARD	
*	10	A-1316-397-A	G COMPLETE PC BOARD	
⚠	11	1-790-316-41	CORD, AC POWER (WITH CONNECTOR) (KV-36FV27 ONLY)	
⚠	11	1-790-316-11	CORD, AC POWER (WITH CONNECTOR) (KV-32FV27 ONLY)	
⚠	12	1-453-338-21	FBT ASSY NX-4600	[13-15]
⚠	13	1-251-715-22	HV CAP ASSY	
⚠	14	1-900-805-19	FOCUS LEAD	
⚠	15	1-900-805-22	G2 LEAD	
⚠	16	8-598-542-20	TUNER FSS-BTF-WA412	
⚠	17	8-598-501-90	TUNER FSS-BTF-FA402	

	REF.NO.	PART NO.	DESCRIPTION
*	18	1-556-945-21	CABLE, P-P
*	19	1-557-056-31	CABLE, P-P
	20	1-771-787-11	SWITCH, RF ANTENNA
*	21	A-1395-028-A	UX COMPLETE PC BOARD
	22	3-704-372-71	HOLDER, HV CABLE
*	23	4-076-951-01	HINGE, PWB
	24	4-068-998-04	COVER, REAR (KV-36FV27 ONLY)
	24	4-068-000-25	COVER, REAR (KV-32FV27 ONLY)
		The labels associated with the rear cover are not included and must be ordered separately. [See item 26]	
	25	4-080-328-01	HOOK, AC CORD (KV-36FV27 ONLY)
	26	4-070-353-01	LABEL, TUNER TERMINAL

Downloaded from www.Manualslib.com manuals search engine

NOTE: The components identified by shading and ⚠ mark are critical for safety. Replace only with part number specified.

NOTE: Les composants identifies par un trame et une marque ⚠ sont critiques pour la securite. Ne les remplacer que par une piece portant le numero specifie.

6-3. PICTURE TUBE REMOVAL

★ 4-046-765-12 SCREW, TAPPING 7+ CROWN WASHER

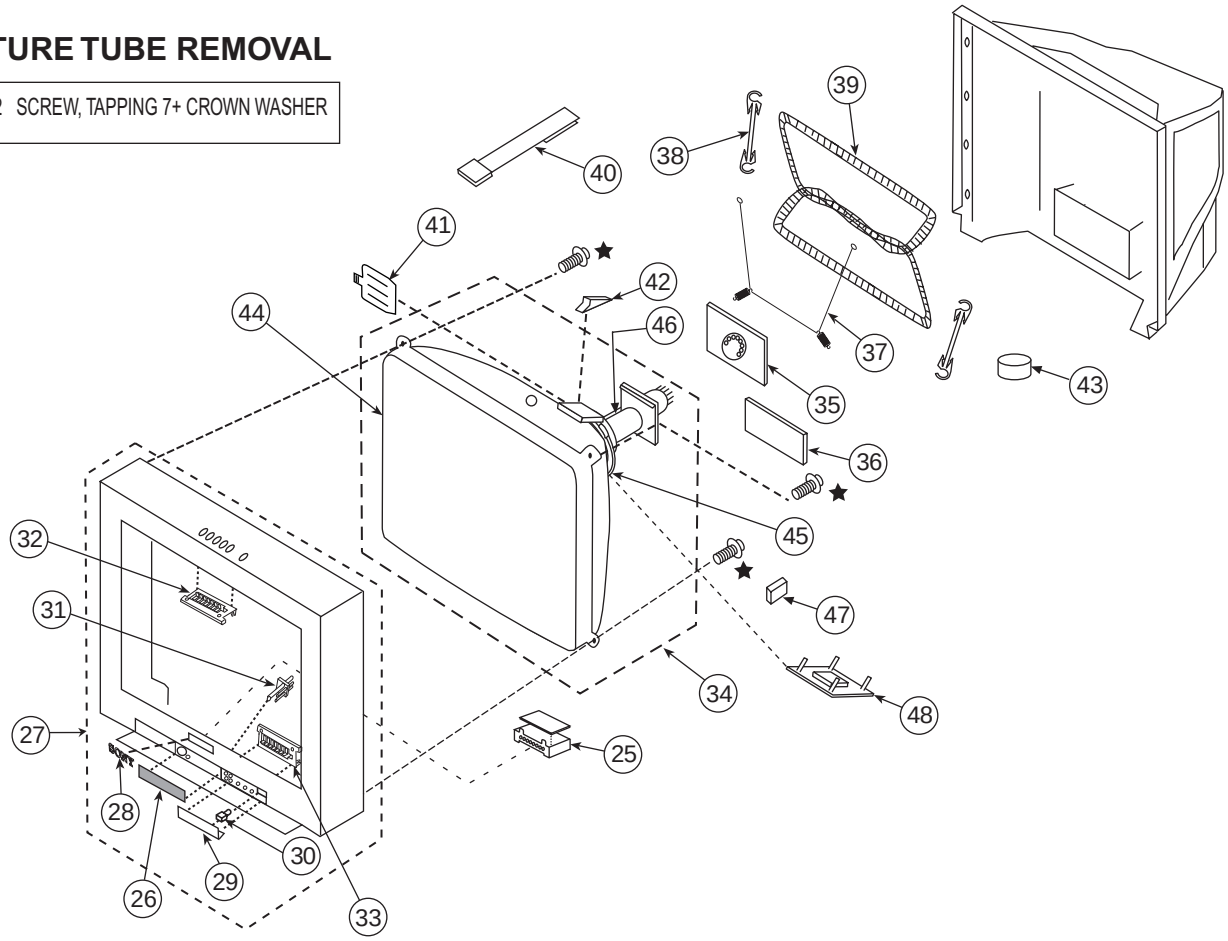

	REF.NO.	PART NO.	DESCRIPTION [Assembly Includes]
*	25	4-068-992-01	CASE, IR SHIELD (Except KV-36FS13/36FS17)
	26	4-068-991-01	PANEL, IR (Except KV-36FS13/36FS17)
	27	X-4038-797-1	BEZNET ASSY (KV-32FV27 ONLY) [28-30]
	27	X-4038-798-1	BEZNET ASSY (KV-36FV27 ONLY) [28-30]
	27	X-4038-799-1	BEZNET ASSY [28-30] (KV-36FS13/36FS17 ONLY)
	27	X-4037-665-2	BEZNET ASSY (KV-38FS17 ONLY) [28-30]
	28	3-704-179-31	EMBLEM (NO.9), SONY
	29	4-075-658-11	DOOR (KV-36FS13/36FS17/38FS17 ONLY)
	29	X-4037-631-3	DOOR ASSEMBLY (KV-32FV27/36FV27 ONLY)
	30	3-703-574-01	RETAINER, DOOR (KV-32FV27/36FV27 ONLY)
	30	4-047-464-01	CATCHER, PUSH (KV-36FS13/36FS17/38FS17)
	31	4-068-986-01	GUIDE, LED (KV-32FV27/36FV27 ONLY)
	31	4-075-657-01	GUIDE, LED (KV-36FS13/36FS17/38FS17 ONLY)
	32	4-068-982-22	MULTI-BUTTON (TOP)
	33	4-068-984-01	MULTI-BUTTON (BOTTOM) (Except KV-36FS13/36FS17)
⚠	34	8-735-048-61	ITC 38RSN-A1 (KV-36FS13/ 36FS17/36FV27/ 36FV27CND ONLY)
⚠	34	8-735-081-61	ITC 38RSN-A1M (KV-36FS13H/36FS17H/36FV27H/38FS17 ONLY)

	REF.NO.	PART NO.	DESCRIPTION
*	35	A-1331-942-A	C (VAR) MOUNTED PC BOARD
*	36	A-1375-221-A	WA COMPLETE PC BOARD (ALL EXCEPT KV-32FV27)
*	36	A-1375-220-A	WA COMPLETE PC BOARD (KV-32FV27 ONLY)
	37	4-036-329-01	SPRING (B), TENSION
	38	4-065-895-11	HOLDER, DGC
⚠	39	1-416-828-41	COIL, DEGAUSSING (Except KV-32FV27)
⚠	39	1-416-827-21	COIL, DEGAUSSING (KV-32FV27 ONLY)
	40	4-083-414-01	PIECE A(110), CONV CORRECT (KV-32FV27 ONLY)
	41	4-081-170-01	PLATE TLH CONVERGENCE (KV-32FV27 ONLY)
	42	4-053-005-01	SPACER, DY (KV-32FV27 ONLY)
	43	1-452-032-00	MAGNET,DISC (KV-32FV27 ONLY)
⚠	44	8-735-066-05	CRT 34RSN(SDP) (KV-32FV27 ONLY)
⚠	44	8-735-081-05	CRT 38RSN (KV-36FS13H/36FS17H/ 36FV27H/ 38FS17 ONLY)
⚠	44	8-735-048-05	CRT 38RSN (KV-36FS13/36FS17/36FV27 ONLY)
⚠	45	8-451-499-21	DY Y34RSA-X (KV-32FV27 ONLY)
⚠	45	8-451-506-11	DY Y38RSA-X (ALL EXCEPT KV-32FV27)
⚠	46	8-453-007-41	NECK ASSEMBLY NA324-M4 (KV-32FV27 ONLY)
	47	4-078-952-01	CUSHION, 20MM X 20MM (KV-32FV27 ONLY)
*	47	4-064-378-01	CUSHION (20MM), CRT (KV-36FS13/36FS17/38FS17)
	48	1-452-896-11	COIL NA ROTATION (RT200) (KV-32FV27 ONLY)

Downloaded from www.Manualslib.com manuals search engine

SECTION 7: ELECTRICAL PARTS LIST

NOTE: The components identified by shading and ⚠ mark are critical for safety. Replace only with part number specified.

NOTE: Les composants identifies par un trame et une marque ⚠ sont critiques pour la securite. Ne les remplacer que par une piece portant le numero specifie.

The components in this manual identified by the following symbol: ⧓ indicate parts that have been carefully factory-selected to satisfy regulations regarding X-ray radiation for each set.

Should replacement be required for one of these components, replace only with the value originally used.

* Items marked with an asterisk are not stocked since they are seldom required for routine service. Expect some delay when ordering these components.

A

RESISTORS
- All resistors are in ohms
- F : nonflammable
- All variable and adjustable resistors have characteristic curve B, unless otherwise noted.

When ordering parts by reference number, please include the board name.

REF.NO.	PART NO.	DESCRIPTION	VALUES
A			
*	A-1299-476-A	A COMPLETE PC BOARD (KV-32FV27 ONLY)	
*	A-1299-467-A	A COMPLETE PC BOARD (KV-36FS13/36FS17/36FV27/38FS17 ONLY)	
	4-382-854-11	SCREW (M3X10), P, SW (+)	

The high-voltage leads associated with the FBT on the A board are not included and must be ordered separately. Order the following leads when requesting this A board:

⚠	1-251-715-22	HV CAP ASSY
⚠	1-900-805-19	FOCUS LEAD
⚠	1-900-805-22	G2 LEAD

CAPACITOR

REF.NO.	PART NO.	DESCRIPTION	VALUES		
C001	1-163-259-91	CERAMIC CHIP	220pF	5%	50V
C003	1-163-809-11	CERAMIC CHIP	0.047µF	10%	25V
C005	1-126-960-11	ELECT	1µF	20%	50V
C009	1-126-967-11	ELECT	47µF	20%	50V
C010	1-163-037-11	CERAMIC CHIP	0.022µF	10%	50V
C012	1-163-135-00	CERAMIC CHIP	560pF	5%	50V
C014	1-163-009-11	CERAMIC CHIP	0.001µF	10%	50V
C017	1-126-960-11	ELECT	1µF	20%	50V
C020	1-163-259-91	CERAMIC CHIP	220pF	5%	50V
C023	1-163-259-91	CERAMIC CHIP	220pF	5%	50V
C028	1-163-227-11	CERAMIC CHIP	10pF	0.50pF	50V
C029	1-163-227-11	CERAMIC CHIP	10pF	0.50pF	50V
C030	1-163-038-11	CERAMIC CHIP	0.1µF		25V
C035	1-163-235-11	CERAMIC CHIP	22pF	5%	50V
C036	1-163-235-11	CERAMIC CHIP	22pF	5%	50V
C051	1-164-161-11	CERAMIC CHIP	0.0022µF	10%	50V
C053	1-163-021-91	CERAMIC CHIP	0.01µF	10%	50V
C062	1-163-037-11	CERAMIC CHIP	0.022µF	10%	50V
C063	1-126-941-11	ELECT	470µF	20%	25V
C068	1-163-021-91	CERAMIC CHIP	0.01µF	10%	50V
C071	1-102-129-00	CERAMIC	0.01µF	10%	50V
C072	1-164-161-11	CERAMIC CHIP	0.0022µF	10%	50V
C077	1-126-964-11	ELECT	10µF	20%	50V
C080	1-165-319-11	CERAMIC CHIP	0.1µF		50V
C100	1-165-319-11	CERAMIC CHIP	0.1µF		50V
C301	1-136-165-00	FILM	0.1µF	5%	50V
C306	1-163-233-11	CERAMIC CHIP	18pF	5%	50V
C308	1-163-005-11	CERAMIC CHIP	470pF	10%	50V
C309	1-126-959-11	ELECT	0.47µF	20%	50V
C310	1-104-664-11	ELECT	47µF	20%	25V
C311	1-163-038-11	CERAMIC CHIP	0.1µF		25V
C312	1-126-963-11	ELECT	4.7µF	20%	50V
C314	1-163-038-11	CERAMIC CHIP	0.1µF		25V
C316	1-163-038-11	CERAMIC CHIP	0.1µF		25V
C318	1-163-038-11	CERAMIC CHIP	0.1µF		25V
C319	1-163-038-11	CERAMIC CHIP	0.1µF		25V
C320	1-126-935-11	ELECT	470µF	20%	16V
C321	1-163-031-11	CERAMIC CHIP	0.01µF		50V
C322	1-163-031-11	CERAMIC CHIP	0.01µF		50V
C323	1-163-031-11	CERAMIC CHIP	0.01µF		50V
C326	1-165-319-11	CERAMIC CHIP	0.1µF		50V
C327	1-126-963-11	ELECT	4.7µF	20%	50V
C329	1-165-319-11	CERAMIC CHIP	0.1µF		50V
C331	1-126-964-11	ELECT	10µF	20%	50V
C332	1-126-960-11	ELECT	1µF	20%	50V
C333	1-102-129-00	CERAMIC	0.01µF	10%	50V
C334	1-163-021-91	CERAMIC CHIP	0.01µF	10%	50V
C336	1-163-009-11	CERAMIC CHIP	0.001µF	10%	50V
C338	1-163-038-11	CERAMIC CHIP	0.1µF		25V
C339	1-163-038-11	CERAMIC CHIP	0.1µF		25V
C340	1-163-038-11	CERAMIC CHIP	0.1µF		25V
C343	1-163-038-11	CERAMIC CHIP	0.1µF		25V
C344	1-163-038-11	CERAMIC CHIP	0.1µF		25V
C345	1-163-038-11	CERAMIC CHIP	0.1µF		25V
C351	1-163-031-11	CERAMIC CHIP	0.01µF		50V
C352	1-163-038-11	CERAMIC CHIP	0.1µF		25V
C355	1-163-021-91	CERAMIC CHIP	0.01µF	10%	50V
C357	1-126-967-11	ELECT	47µF	20%	50V
C359	1-163-038-11	CERAMIC CHIP	0.1µF		25V

Downloaded from www.Manualslib.com manuals search engine

NOTE: The components identified by shading and ⚠ mark are critical for safety. Replace only with part number specified.

NOTE: Les composants identifies par un trame et une marque ⚠ sont critiques pour la securite. Ne les remplacer que par une piece portant le numero specifie.

A

REF.NO.	PART NO.	DESCRIPTION	VALUES		
C361	1-163-038-11	CERAMIC CHIP	0.1µF		25V
C374	1-163-038-11	CERAMIC CHIP	0.1µF		25V
C375	1-163-038-11	CERAMIC CHIP	0.1µF		25V
C382	1-163-038-11	CERAMIC CHIP	0.1µF		25V
C384	1-163-038-11	CERAMIC CHIP	0.1µF		25V
C393	1-163-038-11	CERAMIC CHIP	0.1µF		25V
C394	1-163-038-11	CERAMIC CHIP	0.1µF		25V
C395	1-104-664-11	ELECT	47µF	20%	25V
C396	1-163-021-91	CERAMIC CHIP	0.01µF	10%	50V
C397	1-104-664-11	ELECT	47µF	20%	25V
C398	1-126-961-11	ELECT	2.2µF	20%	50V
C501	1-102-110-00	CERAMIC	220pF	10%	50V
C502	1-126-959-11	ELECT	0.47µF	20%	50V
C503	1-163-133-00	CERAMIC CHIP	470pF	5%	50V
C504	1-102-228-00	CERAMIC	470pF	10%	500V
C505	1-102-228-00	CERAMIC	470pF	10%	500V
C506	1-106-383-00	MYLAR	0.047µF	10%	200V
⚠ C507	1-162-116-00	CERAMIC	680pF	10%	2KV
C508	1-102-228-00	CERAMIC	470pF	10%	500V
C509	1-162-116-00	CERAMIC	680pF	10%	2KV
C510	1-137-150-11	MYLAR	0.01µF	10%	100V
⚠ C511	1-137-347-11	FILM	0.022µF	3%	2KV
C512	1-129-928-00	FILM	0.0027µF	10%	630V
⚠ C513	1-130-118-91	FILM	0.051µF	5%	400V
⚠ C514	1-115-521-11	FILM	0.82µF	5%	250V
C515	1-104-987-11	MYLAR	0.001µF	10%	100V
C516	1-115-356-11	FILM	1.2µF	5%	250V
C517	1-107-649-11	ELECT	2.2µF	20%	250V
C518	1-106-387-00	MYLAR	0.068µF	10%	200V
C519	1-107-612-11	CERAMIC	100pF	5%	500V
C520	1-164-646-11	CERAMIC	2200pF	10%	500V
C521	1-163-010-11	CERAMIC CHIP	0.0012µF	10%	50V
C522	1-126-960-11	ELECT	1µF	20%	50V
C525	1-102-244-00	CERAMIC	220pF	10%	500V
C526	1-107-662-11	ELECT	22µF	20%	250V
C527	1-162-116-00	CERAMIC	680pF	10%	2KV
C528	1-164-161-11	CERAMIC CHIP	0.0022µF	10%	50V
C529	1-128-551-11	ELECT	22µF	20%	25V
C530	1-137-366-11	MYLAR	0.0022µF	5%	50V
C531	1-126-965-11	ELECT	22µF	20%	50V
C532	1-126-965-11	ELECT	22µF	20%	50V
C534	1-126-967-11	ELECT	47µF	20%	50V
C537	1-126-941-11	ELECT	470µF	20%	25V
C539	1-126-941-11	ELECT	470µF	20%	25V
C540	1-107-995-11	ELECT	100µF		160V
C541	1-128-560-11	ELECT	22µF	20%	100V
C543	1-104-666-11	ELECT	220µF	20%	25V

REF.NO.	PART NO.	DESCRIPTION	VALUES		
C544	1-129-718-00	FILM	0.022µF	5%	630V
C545	1-106-387-00	MYLAR	0.068µF	10%	200V
C546	1-104-987-11	MYLAR	0.001µF	10%	100V
C547	1-104-987-11	MYLAR	0.001µF	10%	100V
C548	1-164-004-11	CERAMIC CHIP	0.1µF	10%	25V
C549	1-106-375-12	MYLAR	0.022µF	20%	200V
C550	1-102-002-00	CERAMIC	680pF	10%	500V
C551	1-109-954-11	ELECT	0.47µF	20%	160V
C552	1-102-244-00	CERAMIC	220pF	10%	500V
C553	1-117-661-11	FILM	0.15µF	5%	250V
⚠ C554	1-104-491-11	FILM	0.0047µF	3%	2KV
C561	1-126-967-11	ELECT	47µF	20%	50V
C563	1-104-666-11	ELECT	220µF	20%	25V
C564	1-126-960-11	ELECT	1µF	20%	50V
C565	1-126-969-11	ELECT	220µF	20%	50V
C568	1-136-169-00	FILM	0.22µF	5%	50V
C571	1-126-942-61	ELECT	1000µF	20%	25V
C572	1-126-942-61	ELECT	1000µF	20%	25V
C599	1-126-935-11	ELECT	470µF	20%	16V
C1002	1-126-964-11	ELECT	10µF	20%	50V
C1003	1-126-961-11	ELECT	2.2µF	20%	50V
C1004	1-126-960-11	ELECT	1µF	20%	50V
C1101	1-126-943-11	ELECT	2200µF	20%	25V
C1103	1-126-965-11	ELECT	22µF	20%	50V
C1104	1-104-664-11	ELECT	47µF	20%	25V
C1105	1-104-664-11	ELECT	47µF	20%	25V
C1106	1-126-964-11	ELECT	10µF	20%	50V
C1107	1-163-037-11	CERAMIC CHIP	0.022µF	10%	50V
C1108	1-128-551-11	ELECT	22µF	20%	25V
C1109	1-126-964-11	ELECT	10µF	20%	50V
C1117	1-126-960-11	ELECT	1µF	20%	50V
C1118	1-126-960-11	ELECT	1µF	20%	50V
C1351	1-163-237-11	CERAMIC CHIP	27pF	5%	50V
C1355	1-163-009-11	CERAMIC CHIP	0.001µF	10%	50V
C1356	1-126-964-11	ELECT	10µF	20%	50V
C1357	1-164-005-11	CERAMIC CHIP	0.47µF		16V
C1358	1-126-940-11	ELECT	330µF	20%	25V
C1359	1-163-038-11	CERAMIC CHIP	0.1µF		25V
C1360	1-163-031-11	CERAMIC CHIP	0.01µF		50V
C1361	1-163-241-11	CERAMIC CHIP	39pF	5%	50V
C1362	1-163-017-00	CERAMIC CHIP	0.0047µF	10%	50V
C1363	1-163-031-11	CERAMIC CHIP	0.01µF		50V
C1367	1-163-038-11	CERAMIC CHIP	0.1µF		25V
C1369	1-163-038-11	CERAMIC CHIP	0.1µF		25V
C1370	1-126-964-11	ELECT	10µF	20%	50V
C1371	1-163-017-00	CERAMIC CHIP	0.0047µF	10%	50V
C1372	1-163-017-00	CERAMIC CHIP	0.0047µF	10%	50V

Downloaded from www.Manualslib.com manuals search engine

NOTE: The components identified by shading and ⚠ mark are critical for safety. Replace only with part number specified.

NOTE: Les composants identifies par un trame et une marque ⚠ sont critiques pour la securite. Ne les remplacer que par une piece portant le numero specifie.

A

	REF.NO.	PART NO.	DESCRIPTION	VALUES		
	C1373	1-163-133-00	CERAMIC CHIP	470pF	5%	50V
⚠	C1501	1-107-846-11	FILM (KV-32FV27 ONLY)	0.1µF	5%	250V

CONNECTOR

*	CN270	1-774-105-11	CONNECTOR, BOARD TO BOARD 15P
*	CN271	1-774-105-11	CONNECTOR, BOARD TO BOARD 15P
*	CN272	1-774-105-11	CONNECTOR, BOARD TO BOARD 15P
*	CN302	1-508-784-00	PIN, CONNECTOR (5MM PITCH) 1P
*	CN351	1-564-509-11	PLUG, CONNECTOR 6P
*	CN501	1-580-798-11	CONNECTOR PIN (DY) 6P
*	CN503	1-564-508-11	PLUG, CONNECTOR 5P
*	CN1001	1-564-508-11	PLUG, CONNECTOR 5P
*	CN1002	1-564-506-11	PLUG, CONNECTOR 3P
*	CN1102	1-564-507-11	PLUG, CONNECTOR 4P
*	CN1231	1-564-512-11	PLUG, CONNECTOR 9P
	CN1233	1-564-505-11	PLUG, CONNECTOR 2P
	CN1643	1-695-915-11	TAB (CONTACT)
*	CN1941	1-564-511-11	PLUG, CONNECTOR 8P
*	CN1942	1-564-508-11	PLUG, CONNECTOR 5P

DIODE

	D001	8-719-991-33	DIODE 1SS133T-77
	D002	8-719-109-89	DIODE MTZJ-T-77-5.6C
	D003	8-719-991-33	DIODE 1SS133T-77
	D005	8-719-109-89	DIODE MTZJ-T-77-5.6C (ALL EXCEPT KV-32FV27)
	D006	8-719-081-27	DIODE P6KE6.8A (KV-32FV27 ONLY)
	D012	8-719-991-33	DIODE 1SS133T-77
	D013	8-719-991-33	DIODE 1SS133T-77
	D016	8-719-991-33	DIODE 1SS133T-77
	D018	8-719-073-01	DIODE MA111-TX
	D019	8-719-073-01	DIODE MA111-TX
	D301	8-719-073-01	DIODE MA111-TX
	D302	8-719-991-33	DIODE 1SS133T-77
	D303	8-719-921-44	DIODE MTZJ-T-77-5.1C
	D368	8-719-991-33	DIODE 1SS133T-77
	D384	8-719-921-80	DIODE MTZJ-T-77-11B
	D388	8-719-921-80	DIODE MTZJ-T-77-11B
	D501	8-719-109-89	DIODE MTZJ-T-77-5.6C
	D502	8-719-945-80	DIODE ERC06-15S
⚠	D503	8-719-945-80	DIODE ERC06-15S
	D504	8-719-900-26	DIODE ERD29-08J
	D505	8-719-075-33	DIODE 1N4003GA
	D506	8-719-075-33	DIODE 1N4003GA
	D507	8-719-991-33	DIODE 1SS133T-77
	D510	8-719-300-33	DIODE ERB44-06TP1
	D511	8-719-981-47	DIODE ERA38-06TP1
	D512	8-719-981-47	DIODE ERA38-06TP1
	D513	8-719-110-41	DIODE MTZJ-T-77-15B
⚠	D515	8-719-075-41	DIODE PR1004GT
	D516	8-719-991-33	DIODE 1SS133T-77
	D518	8-719-991-33	DIODE 1SS133T-77
⚠	D519	8-719-302-43	DIODE EL1Z-V1
	D520	8-719-991-33	DIODE 1SS133T-77
	D521	8-719-921-63	DIODE MTZJ-T-77-7.5X
	D522	8-719-991-33	DIODE 1SS133T-77
	D523	8-719-109-69	DIODE MTZJ-T-77-3.6B
	D524	8-719-109-97	DIODE MTZJ-T-77-6.8B
⚠	D530	8-719-081-01	DIODE ER204
	D531	8-719-081-01	DIODE ER204
	D534	8-719-075-41	DIODE PR1004GT
	D535	8-719-073-01	DIODE MA111-TX
	D536	1-216-295-11	SHORT
	D561	8-719-075-33	DIODE 1N4003GA
	D1003	8-719-110-17	DIODE MTZJ-T-77-10B
	D1004	8-719-110-17	DIODE MTZJ-T-77-10B
	D1101	8-719-110-17	DIODE MTZJ-T-77-10B
	D1102	8-719-982-24	DIODE MTZJ-T-77-33A
	D1103	8-719-109-89	DIODE MTZJ-T-77-5.6C
	D1104	8-719-110-17	DIODE MTZJ-T-77-10B
	D1301	8-719-073-01	DIODE MA111-TX
	D1302	8-719-991-33	DIODE 1SS133T-77
	D1303	8-719-073-01	DIODE MA111-TX
	D1304	8-719-073-01	DIODE MA111-TX
	D1305	8-719-073-01	DIODE MA111-TX
	D1306	8-719-073-01	DIODE MA111-TX

FERRITE BEAD

FB501	1-410-397-21	FERRITE	1.1µH
FB502	1-410-397-21	FERRITE	1.1µH
FB503	1-410-397-21	FERRITE	1.1µH

IC

IC001	8-759-835-08	IC M306V5ME-105SP
IC002	8-759-562-42	IC CAT24WC08J-TE13
IC003	8-759-352-91	IC PST9143NL
IC351	8-759-710-86	IC NJM2233BM(TE2)
IC352	8-752-080-75	IC CXA2039M-T6
IC353	8-759-462-91	IC TA1226N
IC354	8-752-082-49	IC CXA2119M-T6
⚠ IC355	8-752-098-79	IC CXA2131CS
IC501	8-759-700-07	IC NJM2903M-TE2
⚠ IC561	8-759-192-71	IC STV9379
IC1001	8-752-058-68	IC CXA1315M-T4

Downloaded from www.Manualslib.com manuals search engine

NOTE: The components identified by shading and ⚠ mark are critical for safety. Replace only with part number specified.

NOTE: Les composants identifies par un trame et une marque ⚠ sont critiques pour la securite. Ne les remplacer que par une piece portant le numero specifie.

A

REF.NO.	PART NO.	DESCRIPTION	VALUES		
	CHIP CONDUCTOR				
JR001	1-216-295-11	SHORT			
JR002	1-216-295-11	SHORT			
JR003	1-216-295-11	SHORT			
JR004	1-216-049-11	RES-CHIP	1K	5%	1/10W
JR005	1-216-295-11	SHORT			
JR051	1-216-295-11	SHORT			
JR053	1-216-295-11	SHORT			
JR054	1-216-295-11	SHORT			
JR202	1-216-295-11	SHORT			
JR4120	1-216-295-11	SHORT			
	COIL				
L001	1-414-857-11	INDUCTOR	100µH		
L002	1-414-857-11	INDUCTOR	100µH		
L003	1-414-856-11	INDUCTOR	10µH		
L004	1-414-182-11	INDUCTOR	6.8µH		
L005	1-410-506-11	INDUCTOR	5.6µH		
L006	1-410-506-11	INDUCTOR	5.6µH		
L007	1-410-506-11	INDUCTOR	5.6µH		
L301	1-414-857-11	INDUCTOR	100µH		
L302	1-414-856-11	INDUCTOR	10µH		
L351	1-414-186-31	INDUCTOR	33µH		
L501	1-406-677-11	INDUCTOR	10MH		
L502	1-412-552-11	INDUCTOR	2.2MH		
L503	1-406-677-11	INDUCTOR	10MH		
L504	1-419-754-11	INDUCTOR	10MH		
L505	1-406-978-11	INDUCTOR	150µH		
L511	1-411-189-11	INDUCTOR	15MH		
L517	1-412-552-11	INDUCTOR	2.2MH		
L1101	1-414-857-11	INDUCTOR	100µH		
L1102	1-414-856-11	INDUCTOR	10µH		
L1351	1-414-856-11	INDUCTOR	10µH		
L1352	1-412-754-21	INDUCTOR	39µH		
	TRANSISTOR				
Q001	8-729-216-22	TRANSISTOR 2SB709A-QRS-TX			
Q002	8-729-422-27	TRANSISTOR 2SD601A-QRS-TX			
Q003	8-729-422-27	TRANSISTOR 2SD601A-QRS-TX			
Q004	8-729-216-22	TRANSISTOR 2SB709A-QRS-TX			
Q005	8-729-422-27	TRANSISTOR 2SD601A-QRS-TX			
Q006	8-729-422-27	TRANSISTOR 2SD601A-QRS-TX			
Q007	8-729-216-22	TRANSISTOR 2SB709A-QRS-TX			
Q008	8-729-422-27	TRANSISTOR 2SD601A-QRS-TX			
Q009	8-729-422-27	TRANSISTOR 2SD601A-QRS-TX			
Q016	8-729-422-27	TRANSISTOR 2SD601A-QRS-TX			
Q103	8-729-216-22	TRANSISTOR 2SB709A-QRS-TX			
Q104	8-729-216-22	TRANSISTOR 2SB709A-QRS-TX			

REF.NO.	PART NO.	DESCRIPTION	VALUES		
Q301	8-729-422-27	TRANSISTOR 2SD601A-QRS-TX			
Q303	8-729-422-27	TRANSISTOR 2SD601A-QRS-TX			
Q304	8-729-216-22	TRANSISTOR 2SB709A-QRS-TX			
Q305	8-729-216-22	TRANSISTOR 2SB709A-QRS-TX			
Q306	8-729-216-22	TRANSISTOR 2SB709A-QRS-TX			
Q307	8-729-422-27	TRANSISTOR 2SD601A-QRS-TX			
Q310	8-729-216-22	TRANSISTOR 2SB709A-QRS-TX			
Q311	8-729-216-22	TRANSISTOR 2SB709A-QRS-TX			
Q313	8-729-422-27	TRANSISTOR 2SD601A-QRS-TX			
Q314	8-729-422-27	TRANSISTOR 2SD601A-QRS-TX			
Q351	8-729-422-27	TRANSISTOR 2SD601A-QRS-TX			
Q352	8-729-422-27	TRANSISTOR 2SD601A-QRS-TX			
Q359	8-729-216-22	TRANSISTOR 2SB709A-QRS-TX			
Q361	8-729-422-27	TRANSISTOR 2SD601A-QRS-TX			
Q362	8-729-422-27	TRANSISTOR 2SD601A-QRS-TX			
Q364	8-729-216-22	TRANSISTOR 2SB709A-QRS-TX			
Q369	8-729-422-27	TRANSISTOR 2SD601A-QRS-TX			
Q370	8-729-422-27	TRANSISTOR 2SD601A-QRS-TX			
Q501	8-729-140-50	TRANSISTOR 2SC3209LK-TP			
⚠ Q502	8-729-045-26	TRANSISTOR 2SD2580-YB			
Q503	8-729-422-27	TRANSISTOR 2SD601A-QRS-TX			
Q504	8-729-422-27	TRANSISTOR 2SD601A-QRS-TX			
Q507	8-729-043-95	TRANSISTOR 2SC3840K			
⚠ Q511	8-729-422-27	TRANSISTOR 2SD601A-QRS-TX			
⚠ Q512	8-729-809-29	TRANSISTOR 2SC4159-E			
Q561	8-729-422-27	TRANSISTOR 2SD601A-QRS-TX			
Q562	8-729-422-27	TRANSISTOR 2SD601A-QRS-TX			
Q1102	8-729-423-33	TRANSISTOR 2SC3311A-QRSTA			
Q1103	8-729-422-27	TRANSISTOR 2SD601A-QRS-TX			
Q1301	8-729-216-22	TRANSISTOR 2SB709A-QRS-TX			
Q1302	8-729-422-27	TRANSISTOR 2SD601A-QRS-TX			
Q1303	8-729-422-27	TRANSISTOR 2SD601A-QRS-TX			
Q1352	8-729-422-27	TRANSISTOR 2SD601A-QRS-TX			
Q1353	8-729-216-22	TRANSISTOR 2SB709A-QRS-TX			
Q1354	8-729-422-27	TRANSISTOR 2SD601A-QRS-TX			
	RESISTOR				
R001	1-216-057-00	RES-CHIP	2.2K	5%	1/10W
R002	1-249-417-11	CARBON	1K	5%	1/4W
R003	1-216-097-11	RES-CHIP	100K	5%	1/10W
R004	1-216-121-11	RES-CHIP	1M	5%	1/10W
R005	1-216-033-00	RES-CHIP	220	5%	1/10W
R006	1-216-033-00	RES-CHIP	220	5%	1/10W
R007	1-216-073-00	RES-CHIP	10K	5%	1/10W
R008	1-216-033-00	RES-CHIP	220	5%	1/10W
R009	1-216-073-00	RES-CHIP	10K	5%	1/10W
R010	1-216-041-00	RES-CHIP	470	5%	1/10W

Downloaded from www.Manualslib.com manuals search engine

A

REF.NO.	PART NO.	DESCRIPTION	VALUES		
R011	1-216-065-91	RES-CHIP	4.7K	5%	1/10W
R012	1-216-033-00	RES-CHIP	220	5%	1/10W
R013	1-216-065-91	RES-CHIP	4.7K	5%	1/10W
R014	1-216-065-91	RES-CHIP	4.7K	5%	1/10W
R015	1-216-073-00	RES-CHIP	10K	5%	1/10W
R016	1-216-073-00	RES-CHIP	10K	5%	1/10W
R019	1-249-425-11	CARBON	4.7K	5%	1/4W
R020	1-216-065-91	RES-CHIP	4.7K	5%	1/10W
R021	1-216-073-00	RES-CHIP	10K	5%	1/10W
R022	1-216-073-00	RES-CHIP	10K	5%	1/10W
R023	1-249-437-11	CARBON	47K	5%	1/4W
R024	1-249-417-11	CARBON	1K	5%	1/4W
R025	1-216-041-00	RES-CHIP	470	5%	1/10W
R026	1-216-121-11	RES-CHIP	1M	5%	1/10W
R027	1-249-417-11	CARBON	1K	5%	1/4W
R028	1-249-429-11	CARBON	10K	5%	1/4W
R029	1-216-025-11	RES-CHIP	100	5%	1/10W
R030	1-216-065-91	RES-CHIP	4.7K	5%	1/10W
R031	1-216-033-00	RES-CHIP	220	5%	1/10W
R032	1-249-409-11	CARBON	220	5%	1/4W
R033	1-249-425-11	CARBON	4.7K	5%	1/4W
R034	1-216-295-11	SHORT			
R035	1-216-041-00	RES-CHIP	470	5%	1/10W
R036	1-249-417-11	CARBON	1K	5%	1/4W
R037	1-249-417-11	CARBON	1K	5%	1/4W
R038	1-249-417-11	CARBON	1K	5%	1/4W
R040	1-216-033-00	RES-CHIP	220	5%	1/10W
R041	1-216-295-11	SHORT			
R043	1-249-409-11	CARBON	220	5%	1/4W
R044	1-249-417-11	CARBON	1K	5%	1/4W
R045	1-216-033-00	RES-CHIP	220	5%	1/10W
R046	1-216-033-00	RES-CHIP	220	5%	1/10W
R047	1-216-049-11	RES-CHIP	1K	5%	1/10W
R048	1-249-417-11	CARBON	1K	5%	1/4W
R049	1-249-417-11	CARBON	1K	5%	1/4W
R052	1-216-049-11	RES-CHIP	1K	5%	1/10W
R053	1-216-025-11	RES-CHIP	100	5%	1/10W
R055	1-216-097-11	RES-CHIP	100K	5%	1/10W
R056	1-249-409-11	CARBON	220	5%	1/4W
R057	1-216-049-11	RES-CHIP	1K	5%	1/10W
R060	1-216-073-00	RES-CHIP	10K	5%	1/10W
R061	1-216-073-00	RES-CHIP	10K	5%	1/10W
R062	1-216-073-00	RES-CHIP	10K	5%	1/10W
R063	1-216-073-00	RES-CHIP	10K	5%	1/10W
R064	1-216-057-00	RES-CHIP	2.2K	5%	1/10W
R065	1-216-057-00	RES-CHIP	2.2K	5%	1/10W
R066	1-216-057-00	RES-CHIP	2.2K	5%	1/10W

REF.NO.	PART NO.	DESCRIPTION	VALUES		
R067	1-216-057-00	RES-CHIP	2.2K	5%	1/10W
R068	1-249-429-11	CARBON	10K	5%	1/4W
R069	1-249-429-11	CARBON	10K	5%	1/4W
R070	1-216-057-00	RES-CHIP	2.2K	5%	1/10W
R071	1-249-409-11	CARBON	220	5%	1/4W
R072	1-216-033-00	RES-CHIP	220	5%	1/10W
R073	1-249-409-11	CARBON	220	5%	1/4W
R074	1-216-033-00	RES-CHIP	220	5%	1/10W
R075	1-249-409-11	CARBON	220	5%	1/4W
R076	1-216-033-00	RES-CHIP	220	5%	1/10W
R078	1-249-417-11	CARBON	1K	5%	1/4W
R079	1-216-033-00	RES-CHIP	220	5%	1/10W
R081	1-247-807-31	CARBON	100	5%	1/4W
R082	1-247-807-31	CARBON	100	5%	1/4W
R083	1-249-429-11	CARBON	10K	5%	1/4W
R085	1-249-425-11	CARBON	4.7K	5%	1/4W
R086	1-216-073-00	RES-CHIP	10K	5%	1/10W
R089	1-216-073-00	RES-CHIP	10K	5%	1/10W
R090	1-249-409-11	CARBON	220	5%	1/4W
R096	1-216-033-00	RES-CHIP	220	5%	1/10W
R097	1-249-425-11	CARBON	4.7K	5%	1/4W
R099	1-249-425-11	CARBON	4.7K	5%	1/4W
R106	1-216-081-00	RES-CHIP	22K	5%	1/10W
R107	1-216-081-00	RES-CHIP	22K	5%	1/10W
R108	1-216-081-00	RES-CHIP	22K	5%	1/10W
R109	1-216-081-00	RES-CHIP	22K	5%	1/10W
R133	1-216-037-00	RES-CHIP	330	5%	1/10W
R302	1-208-291-11	RES-CHIP	4.7M	5%	1/10W
R304	1-216-033-00	RES-CHIP	220	5%	1/10W
R305	1-249-409-11	CARBON	220	5%	1/4W
R306	1-249-409-11	CARBON	220	5%	1/4W
R307	1-216-295-11	SHORT			
R309	1-216-295-11	SHORT			
R311	1-216-073-00	RES-CHIP	10K	5%	1/10W
R313	1-216-065-91	RES-CHIP	4.7K	5%	1/10W
R314	1-216-073-00	RES-CHIP	10K	5%	1/10W
R315	1-216-073-00	RES-CHIP	10K	5%	1/10W
R316	1-216-073-00	RES-CHIP	10K	5%	1/10W
R319	1-216-057-00	RES-CHIP	2.2K	5%	1/10W
R320	1-216-057-00	RES-CHIP	2.2K	5%	1/10W
R321	1-216-057-00	RES-CHIP	2.2K	5%	1/10W
R325	1-216-033-00	RES-CHIP	220	5%	1/10W
R326	1-216-085-00	RES-CHIP	33K	5%	1/10W
R327	1-216-033-00	RES-CHIP	220	5%	1/10W
R330	1-208-806-11	METAL CHIP	10K	0.50%	1/10W
R331	1-216-065-91	RES-CHIP	4.7K	5%	1/10W
R332	1-216-033-00	RES-CHIP	220	5%	1/10W
R334	1-216-033-00	RES-CHIP	220	5%	1/10W

Downloaded from www.Manualslib.com manuals search engine

NOTE: The components identified by shading and ⚠ mark are critical for safety. Replace only with part number specified.

A component identified by this ⋈ symbol indicates that it has been carefully factory-selected to satisfy regulations regarding X-ray radiation. Should replacement be required, replace only with the value originally used.

A

REF.NO.	PART NO.	DESCRIPTION	VALUES		
R335	1-216-033-00	RES-CHIP	220	5%	1/10W
R336	1-216-049-11	RES-CHIP	1K	5%	1/10W
R337	1-216-347-11	METAL OXIDE	0.68	5%	1W
R340	1-216-105-91	RES-CHIP	220K	5%	1/10W
R341	1-216-073-00	RES-CHIP	10K	5%	1/10W
R342	1-216-097-11	RES-CHIP	100K	5%	1/10W
R343	1-216-093-91	RES-CHIP	68K	5%	1/10W
R344	1-216-073-00	RES-CHIP	10K	5%	1/10W
R346	1-216-023-00	RES-CHIP	82	5%	1/10W
R347	1-216-041-00	RES-CHIP	470	5%	1/10W
R348	1-216-033-00	RES-CHIP	220	5%	1/10W
R349	1-216-041-00	RES-CHIP	470	5%	1/10W
R350	1-247-807-31	CARBON	100	5%	1/4W
R352	1-216-073-00	RES-CHIP	10K	5%	1/10W
R353	1-216-295-11	SHORT			
R354	1-216-073-00	RES-CHIP	10K	5%	1/10W
R355	1-216-069-00	RES-CHIP	6.8K	5%	1/10W
R356	1-216-025-11	RES-CHIP	100	5%	1/10W
R358	1-216-295-11	SHORT			
R359	1-216-073-00	RES-CHIP	10K	5%	1/10W
R360	1-249-409-11	CARBON	220	5%	1/4W
R361	1-216-049-11	RES-CHIP	1K	5%	1/10W
R362	1-216-073-00	RES-CHIP	10K	5%	1/10W
R370	1-216-049-11	RES-CHIP	1K	5%	1/10W
R372	1-216-097-11	RES-CHIP	100K	5%	1/10W
R373	1-216-121-11	RES-CHIP	1M	5%	1/10W
R374	1-216-041-00	RES-CHIP	470	5%	1/10W
R375	1-216-049-11	RES-CHIP	1K	5%	1/10W
R376	1-216-025-11	RES-CHIP	100	5%	1/10W
R378	1-216-083-00	RES-CHIP	27K	5%	1/10W
R383	1-216-025-11	RES-CHIP	100	5%	1/10W
R384	1-216-037-00	RES-CHIP	330	5%	1/10W
R385	1-249-425-11	CARBON	4.7K	5%	1/4W
R386	1-249-429-11	CARBON	10K	5%	1/4W
R387	1-216-037-00	RES-CHIP	330	5%	1/10W
R398	1-216-095-00	RES-CHIP	82K	5%	1/10W
R501	1-216-041-00	RES-CHIP	470	5%	1/10W
R502	1-216-065-91	RES-CHIP	4.7K	5%	1/10W
R503	1-249-425-11	CARBON	4.7K	5%	1/4W
R504	1-216-455-21	METAL OXIDE	560	5%	2W
R505	1-249-433-11	CARBON	22K	5%	1/4W
R506	1-215-861-00	METAL OXIDE	47	5%	1W
R507	1-249-401-11	CARBON	47	5%	1/4W
R508	1-249-425-11	CARBON	4.7K	5%	1/4W
R509	1-260-328-11	CARBON	1K	5%	1/2W
⚠ R510	1-215-883-11	METAL OXIDE	33	5%	2W
R512	1-215-910-00	METAL OXIDE	68	5%	3W

REF.NO.	PART NO.	DESCRIPTION	VALUES		
R514	1-216-081-00	RES-CHIP	22K	5%	1/10W
R515	1-208-812-11	METAL CHIP	18K	0.50%	1/10W
R516	1-208-790-11	METAL CHIP	2.2K	0.50%	1/10W
R517	1-249-417-11	CARBON	1K	5%	1/4W
R518	1-216-073-00	RES-CHIP	10K	5%	1/10W
R519	1-249-413-11	CARBON	470	5%	1/4W
R520	1-215-907-11	METAL OXIDE	22	5%	3W
R521	1-216-081-00	RES-CHIP	22K	5%	1/10W
R523	1-208-808-11	METAL CHIP	12K	0.50%	1/10W
R524	1-249-429-11	CARBON	10K	5%	1/4W
R525	1-208-804-11	METAL CHIP	8.2K	0.50%	1/10W
R526	1-215-905-11	METAL OXIDE	10	5%	3W
R527	1-216-097-11	RES-CHIP	100K	5%	1/10W
R528	1-208-814-91	METAL CHIP	22K	0.50%	1/10W
R529	1-208-814-91	METAL CHIP	22K	0.50%	1/10W
⚠ ⋈ R530	1-208-808-11	METAL CHIP	12K	0.50%	1/10W
⚠ ⋈ R531	1-216-091-00	RES-CHIP	56K	5%	1/10W
R532	1-208-760-11	METAL CHIP	120	0.50%	1/10W
R533	1-215-902-11	METAL OXIDE	47K	5%	1W
⚠ R536	1-260-288-11	CARBON	0.47	5%	1/2W
⚠ R537	1-260-288-11	CARBON	0.47	5%	1/2W
R538	1-247-887-00	CARBON	220K	5%	1/4W
R539	1-215-891-11	METAL OXIDE	680	5%	2W
R540	1-208-826-11	METAL CHIP	68K	0.50%	1/10W
R541	1-215-922-11	METAL OXIDE (KV-32FV27 ONLY)	6.8K	5%	3W
R541	1-215-919-11	METAL OXIDE (ALL EXCEPT KV-32FV27)	2.2K	5%	3W
R542	1-215-921-11	METAL OXIDE	4.7K	5%	3W
⚠ R543	1-249-377-11	CARBON	0.47	5%	1/4W
R544	1-216-113-00	RES-CHIP	470K	5%	1/10W
⚠ R545	1-249-387-11	CARBON	3.3	5%	1/4W
R546	1-215-453-00	METAL	22K	1%	1/4W
R547	1-215-457-00	METAL	33K	1%	1/4W
R548	1-215-921-11	METAL OXIDE	4.7K	5%	3W
R549	1-215-437-00	METAL	4.7K	1%	1/4W
⚠ R550	1-249-377-11	CARBON	0.47	5%	1/4W
R551	1-215-873-00	METAL OXIDE	4.7K	5%	1W
R552	1-216-455-21	METAL OXIDE	560	5%	2W
⚠ R553	1-260-288-11	CARBON	0.47	5%	1/2W
R554	1-215-894-11	METAL OXIDE	2.2K	5%	2W
R555	1-249-441-11	CARBON	100K	5%	1/4W
R556	1-249-441-11	CARBON	100K	5%	1/4W
R557	1-249-441-11	CARBON	100K	5%	1/4W
R559	1-216-017-91	RES-CHIP	47	5%	1/10W
R560	1-215-922-11	METAL OXIDE (KV-32FV27 ONLY)	6.8K	5%	3W

Downloaded from www.Manualslib.com manuals search engine

NOTE: The components identified by shading and ⚠ mark are critical for safety. Replace only with part number specified.

NOTE: Les composants identifies par un trame et une marque ⚠ sont critiques pour la securite. Ne les remplacer que par une piece portant le numero specifie.

A

	REF.NO.	PART NO.	DESCRIPTION	VALUES		
	R560	1-215-919-11	METAL OXIDE (ALL EXCEPT KV-32FV27)	2.2K	5%	3W
	R561	1-208-806-11	METAL CHIP	10K	0.50%	1/10W
	R563	1-214-798-21	METAL	1.8	1%	1/2W
	R565	1-215-889-00	METAL OXIDE	330	5%	2W
	R566	1-208-802-11	METAL CHIP	6.8K	0.50%	1/10W
⚠	R567	1-249-385-11	CARBON	2.2	5%	1/4W
	R568	1-208-802-11	METAL CHIP	6.8K	0.50%	1/10W
	R569	1-208-806-11	METAL CHIP	10K	0.50%	1/10W
	R570	1-216-097-11	RES-CHIP	100K	5%	1/10W
	R571	1-216-081-00	RES-CHIP	22K	5%	1/10W
	R572	1-216-081-00	RES-CHIP	22K	5%	1/10W
	R573	1-216-097-11	RES-CHIP	100K	5%	1/10W
	R574	1-214-798-21	METAL	1.8	1%	1/2W
	R576	1-215-905-11	METAL OXIDE	10	5%	3W
	R577	1-216-049-11	RES-CHIP	1K	5%	1/10W
	R578	1-216-057-00	RES-CHIP	2.2K	5%	1/10W
	R580	1-249-441-11	CARBON	100K	5%	1/4W
	R581	1-247-887-00	CARBON	220K	5%	1/4W
	R582	1-249-421-11	CARBON	2.2K	5%	1/4W
	R1001	1-247-807-31	CARBON	100	5%	1/4W
	R1002	1-247-807-31	CARBON	100	5%	1/4W
	R1003	1-216-073-00	RES-CHIP	10K	5%	1/10W
	R1005	1-216-073-00	RES-CHIP	10K	5%	1/10W
	R1006	1-216-025-11	RES-CHIP	100	5%	1/10W
	R1007	1-216-025-11	RES-CHIP	100	5%	1/10W
	R1011	1-249-387-11	CARBON	3.3	5%	1/4W
	R1012	1-216-049-11	RES-CHIP	1K	5%	1/10W
	R1030	1-216-065-91	RES-CHIP	4.7K	5%	1/10W
	R1031	1-216-065-91	RES-CHIP	4.7K	5%	1/10W
	R1101	1-216-049-11	RES-CHIP	1K	5%	1/10W
	R1102	1-215-900-11	METAL OXIDE	22K	5%	2W
	R1103	1-216-049-11	RES-CHIP	1K	5%	1/10W
	R1104	1-216-081-00	RES-CHIP	22K	5%	1/10W
	R1105	1-216-085-00	RES-CHIP	33K	5%	1/10W
	R1106	1-216-049-11	RES-CHIP	1K	5%	1/10W
	R1107	1-216-065-91	RES-CHIP	4.7K	5%	1/10W
	R1108	1-216-073-00	RES-CHIP	10K	5%	1/10W
	R1109	1-216-025-11	RES-CHIP	100	5%	1/10W
	R1110	1-216-025-11	RES-CHIP	100	5%	1/10W
	R1113	1-249-417-11	CARBON	1K	5%	1/4W
	R1114	1-249-417-11	CARBON	1K	5%	1/4W
	R1115	1-216-041-00	RES-CHIP	470	5%	1/10W
	R1117	1-249-425-11	CARBON	4.7K	5%	1/4W
	R1118	1-249-425-11	CARBON	4.7K	5%	1/4W
	R1123	1-216-037-00	RES-CHIP	330	5%	1/10W
	R1128	1-216-037-00	RES-CHIP	330	5%	1/10W

REF.NO.	PART NO.	DESCRIPTION	VALUES		
R1129	1-216-295-11	SHORT			
R1301	1-249-401-11	CARBON	47	5%	1/4W
R1302	1-249-401-11	CARBON	47	5%	1/4W
R1303	1-216-065-91	RES-CHIP	4.7K	5%	1/10W
R1304	1-216-051-00	RES-CHIP	1.2K	5%	1/10W
R1305	1-216-051-00	RES-CHIP	1.2K	5%	1/10W
R1306	1-216-049-11	RES-CHIP	1K	5%	1/10W
R1313	1-216-295-11	SHORT			
R1314	1-216-049-11	RES-CHIP	1K	5%	1/10W
R1315	1-216-025-11	RES-CHIP	100	5%	1/10W
R1316	1-216-091-00	RES-CHIP	56K	5%	1/10W
R1317	1-216-105-91	RES-CHIP	220K	5%	1/10W
R1318	1-216-065-91	RES-CHIP	4.7K	5%	1/10W
R1319	1-260-290-71	CARBON	0.68	5%	1/2W
R1320	1-216-073-00	RES-CHIP	10K	5%	1/10W
R1321	1-216-065-91	RES-CHIP	4.7K	5%	1/10W
R1322	1-216-047-91	RES-CHIP	820	5%	1/10W
R1323	1-216-049-11	RES-CHIP	1K	5%	1/10W
R1324	1-216-295-11	SHORT			
R1325	1-216-057-00	RES-CHIP	2.2K	5%	1/10W
R1330	1-216-065-91	RES-CHIP	4.7K	5%	1/10W
R1333	1-216-065-91	RES-CHIP	4.7K	5%	1/10W
R1337	1-216-049-11	RES-CHIP	1K	5%	1/10W
R1358	1-216-025-11	RES-CHIP	100	5%	1/10W
R1359	1-216-025-11	RES-CHIP	100	5%	1/10W
R1360	1-216-049-11	RES-CHIP	1K	5%	1/10W
R1361	1-216-049-11	RES-CHIP	1K	5%	1/10W
R1362	1-216-113-00	RES-CHIP	470K	5%	1/10W
R1363	1-216-057-00	RES-CHIP	2.2K	5%	1/10W
R1364	1-216-097-11	RES-CHIP	100K	5%	1/10W
R1365	1-216-089-11	RES-CHIP	47K	5%	1/10W
R1366	1-216-107-00	RES-CHIP	270K	5%	1/10W
R1369	1-216-093-91	RES-CHIP	68K	5%	1/10W
R1370	1-216-295-11	SHORT			
R1371	1-216-295-11	SHORT			
R1373	1-216-025-11	RES-CHIP	100	5%	1/10W
R1374	1-216-089-11	RES-CHIP	47K	5%	1/10W
R1385	1-216-049-11	RES-CHIP	1K	5%	1/10W
R1387	1-249-429-11	CARBON	10K	5%	1/4W
R1389	1-216-025-11	RES-CHIP	100	5%	1/10W
R1390	1-249-417-11	CARBON	1K	5%	1/4W
R1391	1-216-081-00	RES-CHIP	22K	5%	1/10W
R1392	1-216-081-00	RES-CHIP	22K	5%	1/10W
R1395	1-216-049-11	RES-CHIP	1K	5%	1/10W
R1397	1-216-025-11	RES-CHIP	100	5%	1/10W
R1398	1-216-033-00	RES-CHIP	220	5%	1/10W

Downloaded from www.Manualslib.com manuals search engine

NOTE: The components identified by shading and ⚠ mark are critical for safety. Replace only with part number specified.

NOTE: Les composants identifies par un trame et une marque ⚠ sont critiques pour la securite. Ne les remplacer que par une piece portant le numero specifie.

A AK

	REF.NO.	PART NO.	DESCRIPTION	VALUES
		SWITCH		
	S501	1-572-707-11	SWITCH LEVER	
	S502	1-572-707-11	SWITCH LEVER	
		TRANSFORMER		
	T501	1-437-195-11	TRANSFORMER, HORIZONTAL DRIVE	
⚠	T502	1-426-981-11	TRANSFORMER, FERRITE (PMT)	
⚠	T503	1-453-338-21	FBT ASSY, NX-4600	
⚠	T504	1-424-584-11	TRANSFORMER, DYNAMIC FOCUS	
⚠	T505	1-435-098-11	TRANSFORMER, HORIZONTAL LINEAR	
		THERMISTOR		
	TH501	1-800-193-00	THERMISTOR	
		TUNER		
⚠	TU102	8-598-542-20	TUNER, FSS BTF-WA412	
		CRYSTAL		
⚠	X001	1-767-686-21	VIBRATOR, CRYSTAL	
⚠	X302	1-567-505-11	OSCILLATOR, CRYSTAL	

AK

*	**A-1299-469-A**	**AK COMPLETE PC BOARD (KV-32FV27 / 36FV27 ONLY)**	
*	**A-1299-489-A**	**AK COMPLETE PC BOARD (KV-36FS13 ONLY)**	
*	**A-1299-468-A**	**AK COMPLETE PC BOARD (KV-36FS17/38FS17 ONLY)**	
	4-382-854-11	SCREW (M3X10), P, SW (+)	
		CAPACITOR	
	C101	1-126-960-11	ELECT 1µF 20% 50V (ALL EXCEPT KV-36FS13)
	C102	1-164-161-11	CERAMIC CHIP 0.0022µF 10% 50V (ALL EXCEPT KV-36FS13)
	C104	1-126-964-11	ELECT 10µF 20% 50V (ALL EXCEPT KV-36FS13)
	C106	1-104-664-11	ELECT 47µF 20% 25V (ALL EXCEPT KV-36FS13)
	C108	1-126-942-61	ELECT 1000µF 20% 25V (ALL EXCEPT KV-36FS13)
	C109	1-163-259-91	CERAMIC CHIP 220pF 5% 50V (ALL EXCEPT KV-36FS13)
	C110	1-163-809-11	CERAMIC CHIP 0.047µF 10% 25V (ALL EXCEPT KV-36FS13)
	C111	1-126-960-11	ELECT 1µF 20% 50V (ALL EXCEPT KV-36FS13)
	C113	1-104-666-11	ELECT 220µF 20% 25V (ALL EXCEPT KV-36FS13)
	C115	1-126-960-11	ELECT 1µF 20% 50V (ALL EXCEPT KV-36FS13)
	C175	1-126-941-11	ELECT 470µF 20% 25V
	C440	1-126-965-11	ELECT 22µF 20% 50V (KV-32FV27/36FV27 ONLY)
	C441	1-163-038-11	CERAMIC CHIP 0.1µF 25V (KV-32FV27/36FV27 ONLY)
	C442	1-126-960-11	ELECT 1µF 20% 50V (KV-32FV27/36FV27 ONLY)
	C443	1-163-038-11	CERAMIC CHIP 0.1µF 25V (KV-32FV27/36FV27 ONLY)
	C444	1-164-346-11	CERAMIC CHIP 1µF 16V (KV-32FV27/36FV27 ONLY)
	C445	1-163-038-11	CERAMIC CHIP 0.1µF 25V (KV-32FV27/36FV27 ONLY)
	C446	1-164-346-11	CERAMIC CHIP 1µF 16V (KV-32FV27/36FV27 ONLY)
	C447	1-107-823-11	CERAMIC CHIP 0.47µF 10% 16V (KV-32FV27/36FV27 ONLY)
	C448	1-163-017-00	CERAMIC CHIP 0.0047µF 10% 50V (KV-32FV27/36FV27 ONLY)
	C449	1-107-823-11	CERAMIC CHIP 0.47µF 10% 16V (KV-32FV27/36FV27 ONLY)
	C453	1-163-017-00	CERAMIC CHIP 0.0047µF 10% 50V (KV-32FV27/36FV27 ONLY)
	C454	1-163-133-00	CERAMIC CHIP 470pF 5% 50V (KV-32FV27/36FV27 ONLY)
	C455	1-163-038-11	CERAMIC CHIP 0.1µF 25V (KV-32FV27/36FV27 ONLY)
	C456	1-163-023-00	CERAMIC CHIP 0.015µF 10% 50V (KV-32FV27/36FV27 ONLY)
	C457	1-164-161-11	CERAMIC CHIP 0.0022µF 10% 50V (KV-32FV27/36FV27 ONLY)
	C1401	1-126-963-11	ELECT 4.7µF 20% 50V
	C1402	1-126-968-11	ELECT 100µF 20% 50V
	C1403	1-126-963-11	ELECT 4.7µF 20% 50V
	C1404	1-126-960-11	ELECT 1µF 20% 50V
	C1405	1-126-960-11	ELECT 1µF 20% 50V
	C1406	1-164-004-11	CERAMIC CHIP 0.1µF 10% 25V
	C1407	1-163-989-11	CERAMIC CHIP 0.033µF 10% 25V
	C1408	1-163-989-11	CERAMIC CHIP 0.033µF 10% 25V
	C1409	1-164-182-11	CERAMIC CHIP 0.0033µF 10% 50V
	C1410	1-163-017-00	CERAMIC CHIP 0.0047µF 10% 50V
	C1411	1-164-182-11	CERAMIC CHIP 0.0033µF 10% 50V
	C1412	1-163-037-11	CERAMIC CHIP 0.022µF 10% 50V
	C1413	1-163-009-11	CERAMIC CHIP 0.001µF 10% 50V
	C1414	1-163-009-11	CERAMIC CHIP 0.001µF 10% 50V
	C1415	1-126-959-11	ELECT 0.47µF 20% 50V
	C1416	1-126-963-11	ELECT 4.7µF 20% 50V
	C1417	1-126-959-11	ELECT 0.47µF 20% 50V
	C1420	1-163-037-11	CERAMIC CHIP 0.022µF 10% 50V

Downloaded from www.Manualslib.com manuals search engine

NOTE: The components identified by shading and ⚠ mark are critical for safety. Replace only with part number specified.

NOTE: Les composants identifies par un trame et une marque ⚠ sont critiques pour la securite. Ne les remplacer que par une piece portant le numero specifie.

AK

REF.NO.	PART NO.	DESCRIPTION	VALUES		
C1421	1-126-963-11	ELECT	4.7µF	20%	50V
C1422	1-164-004-11	CERAMIC CHIP	0.1µF	10%	25V
C1428	1-126-963-11	ELECT	4.7µF	20%	50V
C1429	1-126-963-11	ELECT	4.7µF	20%	50V
C1450	1-126-963-11	ELECT (KV-32FV27/36FV27 ONLY)	4.7µF	20%	50V
C1451	1-126-963-11	ELECT (KV-32FV27/36FV27 ONLY)	4.7µF	20%	50V
C1452	1-163-986-00	CERAMIC CHIP (KV-32FV27/36FV27 ONLY)	0.027µF	10%	25V
C1461	1-126-960-11	ELECT	1µF	20%	50V
C1462	1-126-960-11	ELECT	1µF	20%	50V
C1464	1-163-038-11	CERAMIC CHIP	0.1µF	25V	
C1465	1-126-960-11	ELECT	1µF	20%	50V
C1467	1-104-666-11	ELECT	220µF	20%	25V
C1468	1-126-960-11	ELECT	1µF	20%	50V
C1470	1-126-960-11	ELECT	1µF	20%	50V
C1471	1-136-165-00	FILM	0.1µF	5%	50V
C1472	1-137-194-81	FILM	0.47µF	5%	50V
C1473	1-128-550-11	ELECT	2200µF	20%	50V
C1474	1-136-165-00	FILM	0.1µF	5%	50V
C1475	1-128-550-11	ELECT	2200µF	20%	50V
C1476	1-128-550-11	ELECT	2200µF	20%	50V
C1477	1-126-971-11	ELECT	470µF	20%	50V
C1478	1-126-971-11	ELECT	470µF	20%	50V
C1906	1-102-129-00	CERAMIC (KV-32FV27/36FV27 ONLY)	0.01µF	10%	50V
C1907	1-126-964-11	ELECT (KV-32FV27/36FV27 ONLY)	10µF	20%	50V
C1908	1-163-009-11	CERAMIC CHIP (KV-32FV27/36FV27 ONLY)	0.001µF	10%	50V
C1909	1-163-009-11	CERAMIC CHIP (KV-32FV27/36FV27 ONLY)	0.001µF	10%	50V
C1910	1-163-009-11	CERAMIC CHIP (KV-32FV27/36FV27 ONLY)	0.001µF	10%	50V
C1911	1-163-009-11	CERAMIC CHIP (KV-32FV27/36FV27 ONLY)	0.001µF	10%	50V
C1912	1-163-009-11	CERAMIC CHIP (KV-32FV27/36FV27 ONLY)	0.001µF	10%	50V

CONNECTOR

*	CN1462	1-564-507-11	PLUG, CONNECTOR 4P
*	CN1463	1-564-509-11	PLUG, CONNECTOR 6P
*	CN1464	1-764-333-11	PLUG, CONNECTOR 10P
*	CN1465	1-564-507-11	PLUG, CONNECTOR 4P (KV-32FV27/36FV27 ONLY)
*	CN1466	1-564-515-11	PLUG, CONNECTOR 12P
*	CN1467	1-564-510-11	PLUG, CONNECTOR 7P (ALL EXCEPT KV-36FS13)
	CN1468	1-695-915-11	TAB (CONTACT) (ALL EXCEPT KV-36FS13)

REF.NO.	PART NO.	DESCRIPTION	VALUES

DIODE

D101	8-719-109-89	DIODE MTZJ-T-77-5.6C (ALL EXCEPT KV-36FS13)
D103	8-719-991-33	DIODE 1SS133T-77 (ALL EXCEPT KV-36FS13)
D104	8-719-991-33	DIODE 1SS133T-77 (ALL EXCEPT KV-36FS13)
D108	8-719-110-17	DIODE MTZJ-T-77-10B (ALL EXCEPT KV-36FS13)
D109	8-719-110-17	DIODE MTZJ-T-77-10B (ALL EXCEPT KV-36FS13)
D1461	8-719-991-33	DIODE 1SS133T-77
D1463	8-719-991-33	DIODE 1SS133T-77
D1466	8-719-991-33	DIODE 1SS133T-77
D1467	8-719-924-13	DIODE MTZJ-T-77-22B
D1468	8-719-924-13	DIODE MTZJ-T-77-22B
D1469	8-719-991-33	DIODE 1SS133T-77

IC

IC1401	8-759-578-88	IC BH3868FS-E2
IC1402	8-759-100-96	IC NJM4558M-TE2
IC1403	8-759-537-26	IC TDA7467D013TR (KV-32FV27/36FV27 ONLY)
⚠ IC1461	8-759-246-70	IC TA8216H
IC1902	8-759-470-63	IC NJM2145M-TE2 (KV-32FV27/36FV27 ONLY)

CHIP CONDUCTOR

JR1901	1-216-295-11	SHORT (KV-32FV27/36FV27 ONLY)
JR1902	1-216-295-11	SHORT (KV-32FV27/36FV27 ONLY)

COIL

L102	1-414-856-11	INDUCTOR (ALL EXCEPT KV-36FS13)	10µH
L105	1-414-857-11	INDUCTOR (ALL EXCEPT KV-36FS13)	100µH
L1401	1-414-857-11	INDUCTOR	100µH

IC LINK

⚠ PS1461	1-532-984-11	LINK, IC 2A/90V	

TRANSISTOR

Q101	8-729-423-33	TRANSISTOR 2SC3311A-QRSTA (ALL EXCEPT KV-36FS13)
Q105	8-729-424-02	TRANSISTOR 2SB709A-QRS-TX (ALL EXCEPT KV-36FS13)
Q106	8-729-422-27	TRANSISTOR 2SD601A-QRS-TX (ALL EXCEPT KV-36FS13)
Q451	8-729-140-97	TRANSISTOR 2SB734-T-34 (KV-32FV27/36FV27 ONLY)

Downloaded from www.Manualslib.com manuals search engine

AK

REF.NO.	PART NO.	DESCRIPTION	VALUES		
Q1461	8-729-422-27	TRANSISTOR 2SD601A-QRS-TX (ALL EXCEPT KV-36FS13)			
Q1462	8-729-422-27	TRANSISTOR 2SD601A-QRS-TX (ALL EXCEPT KV-36FS13)			
Q1463	8-729-900-53	TRANSISTOR DTC114EKA-T146			
Q1464	8-729-900-53	TRANSISTOR DTC114EKA-T146			
Q1902	8-729-424-02	TRANSISTOR 2SB709A-QRS-TX (KV-32FV27/36FV27 ONLY)			
		RESISTOR			
R101	1-216-065-91	RES-CHIP (ALL EXCEPT KV-36FS13)	4.7K	5%	1/10W
R102	1-216-085-91	RES-CHIP (ALL EXCEPT KV-36FS13)	33K	5%	1/10W
R103	1-216-081-00	RES-CHIP (ALL EXCEPT KV-36FS13)	22K	5%	1/10W
R104	1-216-049-11	RES-CHIP (ALL EXCEPT KV-36FS13)	1K	5%	1/10W
R112	1-216-057-00	RES-CHIP (ALL EXCEPT KV-36FS13)	2.2K	5%	1/10W
R113	1-216-097-11	RES-CHIP (ALL EXCEPT KV-36FS13)	100K	5%	1/10W
R114	1-216-121-11	RES-CHIP (ALL EXCEPT KV-36FS13)	1M	5%	1/10W
R115	1-216-073-00	RES-CHIP (ALL EXCEPT KV-36FS13)	10K	5%	1/10W
R116	1-216-073-00	RES-CHIP (ALL EXCEPT KV-36FS13)	10K	5%	1/10W
R117	1-216-065-91	RES-CHIP (ALL EXCEPT KV-36FS13)	4.7K	5%	1/10W
R118	1-208-774-11	METAL CHIP (ALL EXCEPT KV-36FS13)	470	0.50%	1/10W
R119	1-208-776-11	METAL CHIP (ALL EXCEPT KV-36FS13)	560	0.50%	1/10W
R440	1-216-049-11	RES-CHIP (KV-32FV27/36FV27 ONLY)	1K	5%	1/10W
R441	1-216-099-00	RES-CHIP (KV-32FV27/36FV27 ONLY)	120K	5%	1/10W
R442	1-216-065-91	RES-CHIP (KV-32FV27/36FV27 ONLY)	4.7K	5%	1/10W
R443	1-216-053-00	RES-CHIP (KV-32FV27/36FV27 ONLY)	1.5K	5%	1/10W
R444	1-216-089-11	RES-CHIP (KV-32FV27/36FV27 ONLY)	47K	5%	1/10W
R445	1-216-085-00	RES-CHIP (KV-32FV27/36FV27 ONLY)	33K	5%	1/10W
R446	1-216-063-91	RES-CHIP (KV-32FV27/36FV27 ONLY)	3.9K	5%	1/10W
R450	1-216-073-00	RES-CHIP (KV-32FV27/36FV27 ONLY)	10K	5%	1/10W
R1403	1-216-121-11	RES-CHIP	1M	5%	1/10W
R1404	1-216-295-11	SHORT			

REF.NO.	PART NO.	DESCRIPTION	VALUES		
R1406	1-216-121-11	RES-CHIP	1M	5%	1/10W
R1407	1-216-073-00	RES-CHIP	10K	5%	1/10W
R1408	1-216-295-11	SHORT (KV-32FV27/36FV27 ONLY)			
R1409	1-216-295-11	SHORT			
R1410	1-216-081-00	RES-CHIP	22K	5%	1/10W
R1411	1-216-073-00	RES-CHIP	10K	5%	1/10W
R1412	1-216-089-11	RES-CHIP	47K	5%	1/10W
R1413	1-216-089-11	RES-CHIP	47K	5%	1/10W
R1415	1-216-025-11	RES-CHIP	100	5%	1/10W
R1416	1-216-081-00	RES-CHIP	22K	5%	1/10W
R1417	1-216-081-00	RES-CHIP	22K	5%	1/10W
R1418	1-216-089-11	RES-CHIP	47K	5%	1/10W
R1420	1-216-295-11	SHORT (KV-36FS13/36FS17/38FS17 ONLY)			
R1421	1-216-025-11	RES-CHIP	100	5%	1/10W
R1422	1-216-033-00	RES-CHIP	220	5%	1/10W
R1423	1-216-033-00	RES-CHIP	220	5%	1/10W
R1424	1-216-073-00	RES-CHIP	10K	5%	1/10W
R1425	1-216-073-00	RES-CHIP	10K	5%	1/10W
R1427	1-216-065-91	RES-CHIP	4.7K	5%	1/10W
R1458	1-216-033-00	RES-CHIP (KV-32FV27/36FV27 ONLY)	220	5%	1/10W
R1459	1-216-033-00	RES-CHIP (KV-32FV27/36FV27 ONLY)	220	5%	1/10W
R1461	1-216-057-00	RES-CHIP	2.2K	5%	1/10W
R1462	1-216-073-00	RES-CHIP	10K	5%	1/10W
R1464	1-216-057-00	RES-CHIP	2.2K	5%	1/10W
R1465	1-216-089-11	RES-CHIP	47K	5%	1/10W
R1466	1-216-089-11	RES-CHIP	47K	5%	1/10W
R1467	1-216-073-00	RES-CHIP	10K	5%	1/10W
R1469	1-249-389-11	CARBON	4.7	5%	1/4W
R1470	1-249-389-11	CARBON	4.7	5%	1/4W
R1471	1-216-049-11	RES-CHIP	1K	5%	1/10W
R1472	1-216-077-91	RES-CHIP	15K	5%	1/10W
R1473	1-216-049-11	RES-CHIP	1K	5%	1/10W
R1474	1-216-025-11	RES-CHIP (KV-32FV27/36FV27 ONLY)	100	5%	1/10W
R1474	1-216-049-11	RES-CHIP (KV-36FS13/36FS17/38FS17 ONLY)	1K	5%	1/10W
R1475	1-216-025-11	RES-CHIP (KV-32FV27/36FV27 ONLY)	100	5%	1/10W
R1475	1-216-049-11	RES-CHIP (KV-36FS13/36FS17/38FS17 ONLY)	1K	5%	1/10W
R1480	1-216-057-00	RES-CHIP	2.2K	5%	1/10W
R1481	1-216-057-00	RES-CHIP	2.2K	5%	1/10W
R1482	1-216-295-11	SHORT			
R1483	1-216-295-11	SHORT			

Downloaded from www.Manualslib.com manuals search engine

NOTE: The components identified by shading and ⚠ mark are critical for safety. Replace only with part number specified.

NOTE: Les composants identifies par un trame et une marque ⚠ sont critiques pour la securite. Ne les remplacer que par une piece portant le numero specifie.

AK C G

	REF.NO.	PART NO.	DESCRIPTION	VALUES		
	R1486	1-216-041-00	RES-CHIP (KV-36FS13/36FS17/38FS17 ONLY)	470	5%	1/10W
	R1487	1-216-041-00	RES-CHIP (KV-36FS13/36FS17/38FS17 ONLY)	470	5%	1/10W
	R1906	1-216-073-00	RES-CHIP (KV-32FV27/36FV27 ONLY)	10K	5%	1/10W
	R1907	1-216-033-00	RES-CHIP (KV-32FV27/36FV27 ONLY)	220	5%	1/10W
	R2916	1-216-295-11	SHORT (KV-32FV27/36FV27 ONLY)			
		TUNER				
⚠	TU101	8-598-501-90	TUNER, FSS BTF-FA402 (KV-36FS17/38FS17 ONLY)			

C

*		**A-1331-942-A**	**C (VAR) MOUNTED PC BOARD**			
		4-382-854-11	SCREW (M3X10), P, SW (+)			
		CAPACITOR				
	C1750	1-137-528-11	MYLAR	0.1µF	10%	250V
	C1751	1-107-655-11	ELECT	47µF	20%	250V
	C1790	1-102-129-00	CERAMIC	0.01µF	10%	50V
	C1791	1-126-968-11	ELECT	100µF	20%	50V
	C1792	1-102-116-00	CERAMIC	680pF	10%	50V
	C1794	1-107-652-11	ELECT	10µF	20%	250V
	C1795	1-102-074-00	CERAMIC	0.001µF	10%	50V
	C1799	1-162-114-00	CERAMIC	0.0047µF		2KV
		CONNECTOR				
*	CN1761	1-564-509-11	PLUG, CONNECTOR	6P		
*	CN1764	1-564-508-11	PLUG, CONNECTOR	5P		
	CN1765	1-785-879-11	CONNECTOR, ONE TOUCH			
	CN1766	1-695-915-11	TAB (CONTACT)			
		DIODE				
	D1790	8-719-991-33	DIODE 1SS133T-77			
	D1791	8-719-075-33	DIODE 1N4003GA			
	D1792	8-719-075-33	DIODE 1N4003GA			
	D1793	8-719-075-33	DIODE 1N4003GA			
	D1794	8-719-075-33	DIODE 1N4003GA			
		IC				
⚠	IC1701	8-759-562-43	IC TDA6108JF/N1B			
		JACK				
⚠	J1761	1-251-797-11	SOCKET, CRT			

	REF.NO.	PART NO.	DESCRIPTION	VALUES		
		COIL				
	L1790	1-412-537-31	INDUCTOR	100µH		
		TRANSISTOR				
	Q1790	8-729-119-76	TRANSISTOR 2SA1309A-QRSTA			
		RESISTOR				
	R1750	1-247-870-11	CARBON	43K	5%	1/4W
	R1751	1-249-409-11	CARBON	220	5%	1/4W
	R1752	1-249-409-11	CARBON	220	5%	1/4W
⚠	R1753	1-249-409-11	CARBON	220	5%	1/4W
	R1763	1-260-328-11	CARBON	1K	5%	1/2W
	R1764	1-247-807-31	CARBON	100	5%	1/4W
	R1773	1-260-328-11	CARBON	1K	5%	1/2W
	R1774	1-247-807-31	CARBON	100	5%	1/4W
	R1783	1-260-328-11	CARBON	1K	5%	1/2W
	R1784	1-247-807-31	CARBON	100	5%	1/4W
	R1788	1-216-349-00	METAL OXIDE	1	5%	1W
	R1789	1-249-437-11	CARBON	47K	5%	1/4W
	R1792	1-249-409-11	CARBON	220	5%	1/4W
	R1793	1-247-866-11	CARBON	30K	5%	1/4W
	R1794	1-260-132-11	CARBON	560K	5%	1/2W
	R1795	1-260-087-11	CARBON	100	5%	1/2W
⚠	R1796	1-216-373-11	METAL OXIDE	2.2	5%	2W
	R1797	1-260-123-11	CARBON	100K	5%	1/2W
		VARIABLE RESISTOR				
	RV1761	1-241-714-11	RES, ADJ, METAL FILM 110M			

G

*		**A-1316-397-A**	**G COMPLETE PC BOARD**			
		1-533-223-11	HOLDER, FUSE			
		4-382-854-11	SCREW (M3X10), P, SW (+)			
		CAPACITOR				
	C601	1-136-346-21	MYLAR	0.22µF	20%	125V
	C602	1-126-964-11	ELECT	10µF	20%	50V
⚠	C603	1-113-903-11	CERAMIC	0.001µF	20%	250V
⚠	C604	1-136-346-21	MYLAR	0.22µF	20%	125V
⚠	C605	1-136-346-21	MYLAR	0.22µF	20%	125V
⚠	C606	1-117-894-11	ELECT	560µF	20%	250V
⚠	C607	1-117-894-11	ELECT	560µF	20%	250V
	C608	1-107-824-11	CERAMIC	220pF	5%	1KV
	C609	1-136-176-00	FILM	0.82µF	5%	50V
	C610	1-136-176-00	FILM	0.82µF	5%	50V
	C611	1-136-169-00	FILM	0.22µF	5%	50V

Downloaded from www.Manualslib.com manuals search engine

NOTE: The components identified by shading and ⚠ mark are critical for safety. Replace only with part number specified.

NOTE: Les composants identifies par un trame et une marque ⚠ sont critiques pour la securite. Ne les remplacer que par une piece portant le numero specifie.

G

	REF.NO.	PART NO.	DESCRIPTION	VALUES		
	C612	1-136-169-00	FILM	0.22µF	5%	50V
	C613	1-164-646-11	CERAMIC	2200pF	10%	500V
	C614	1-126-963-11	ELECT	4.7µF	20%	50V
	C615	1-117-976-11	FILM	0.039µF	5%	800V
⚠	C616	1-113-903-11	CERAMIC	0.001µF	20%	250V
	C617	1-126-967-11	ELECT	47µF	20%	50V
	C618	1-126-968-11	ELECT	100µF	20%	50V
	C624	1-126-960-11	ELECT	1µF	20%	50V
⚠	C629	1-107-652-11	ELECT	10µF	20%	250V
	C630	1-130-471-00	MYLAR	0.001µF	5%	50V
	C631	1-137-605-11	MYLAR	0.01µF	10%	250V
	C633	1-130-471-00	MYLAR	0.001µF	5%	50V
	C634	1-130-467-00	MYLAR	470pF	5%	50V
	C635	1-130-471-00	MYLAR	0.001µF	5%	50V
	C636	1-126-965-11	ELECT	22µF	20%	50V
	C637	1-126-940-11	ELECT	330µF	20%	25V
	C641	1-128-550-11	ELECT	2200µF	20%	50V
	C643	1-107-995-11	ELECT	100µF	160V	
	C644	1-126-941-11	ELECT	470µF	20%	25V
	C647	1-104-665-11	ELECT	100µF	20%	25V
	C650	1-104-664-11	ELECT	47µF	20%	25V
	C651	1-130-477-00	MYLAR	0.0033µF	5%	50V
	C652	1-106-351-00	MYLAR	0.0022µF	20%	200V
	C653	1-107-636-11	ELECT	10µF	20%	160V
	C656	1-126-964-11	ELECT	10µF	20%	50V
	C657	1-136-165-00	FILM	0.1µF	5%	50V
	C658	1-126-941-11	ELECT	470µF	20%	25V
	C660	1-126-936-11	ELECT	3300µF	20%	16V
	C661	1-104-664-11	ELECT	47µF	20%	25V
	C662	1-126-933-11	ELECT	100µF	20%	16V
	C665	1-104-664-11	ELECT	47µF	20%	25V
	C695	1-164-625-11	CERAMIC	680pF	10%	500V
	C696	1-164-625-11	CERAMIC	680pF	10%	500V
	C697	1-164-625-11	CERAMIC	680pF	10%	500V
	C698	1-164-625-11	CERAMIC	680pF	10%	500V
	C699	1-136-169-00	FILM	0.22µF	5%	50V

CONNECTOR

*	CN601	1-573-963-11	PIN, CONNECTOR (PC BOARD) 3P
*	CN602	1-580-844-11	PIN, CONNECTOR (POWER)
*	CN603	1-573-963-11	PIN, CONNECTOR (PC BOARD) 3P
*	CN641	1-564-515-11	PLUG, CONNECTOR 12P
*	CN642	1-564-509-11	PLUG, CONNECTOR 6P
	CN645	1-695-915-11	TAB (CONTACT)
	CN646	1-695-915-11	TAB (CONTACT)

	REF.NO.	PART NO.	DESCRIPTION	VALUES

DIODE

	D600	8-719-991-33	DIODE 1SS133T-77
	D601	8-719-991-33	DIODE 1SS133T-77
⚠	D602	8-719-510-53	DIODE D4SB60L-F
	D603	8-719-063-70	DIODE D1NL20U-TA2
	D604	8-719-991-33	DIODE 1SS133T-77
	D605	8-719-923-83	DIODE MTZJ-T-77-13A
	D606	8-719-110-60	DIODE MTZJ-T-77-24B
	D607	8-719-109-97	DIODE MTZJ-T-77-6.8B
	D608	8-719-109-97	DIODE MTZJ-T-77-6.8B
	D612	8-719-991-33	DIODE 1SS133T-77
	D613	8-719-991-33	DIODE 1SS133T-77
	D614	8-719-991-33	DIODE 1SS133T-77
	D621	8-719-911-55	DIODE ERC04-06S
	D622	8-719-911-55	DIODE ERC04-06S
	D623	8-719-948-45	DIODE ERA22-08TP3
	D624	8-719-991-33	DIODE 1SS133T-77
	D625	8-719-991-33	DIODE 1SS133T-77
	D626	8-719-109-93	DIODE MTZJ-T-77-6.2C
	D627	8-719-510-48	DIODE D1N20R-TA
	D628	8-719-510-02	DIODE D1NS4-TA2
	D629	8-719-052-90	DIODE D1NL40-TA2
	D630	8-719-052-90	DIODE D1NL40-TA2
	D641	8-719-060-89	DIODE D4SBS6-F
	D642	8-719-510-12	DIODE D10SC4M
	D643	8-719-062-40	DIODE D4SBL20µF3
	D647	8-719-063-70	DIODE D1NL20U-TA2
⚠	D648	8-719-057-52	DIODE EZ0150AV1
	D651	8-719-510-02	DIODE D1NS4-TA2
	D652	8-719-510-02	DIODE D1NS4-TA2
	D653	8-719-991-33	DIODE 1SS133T-77
	D698	8-719-991-33	DIODE 1SS133T-77
	D699	8-719-923-86	DIODE MTZJ-T-77-15

FUSE

⚠	F601	1-532-506-51	FUSE 6.3A/250V

FERRITE BEAD

	FB601	1-410-396-41	FERRITE 0.45µH
	FB602	1-410-396-41	FERRITE 0.45µH
	FB603	1-410-396-41	FERRITE 0.45µH
	FB604	1-410-396-41	FERRITE 0.45µH
	FB641	1-410-397-21	FERRITE 1.1µH
	FB642	1-410-397-21	FERRITE 1.1µH
	FB645	1-410-397-21	FERRITE 1.1µH
	FB647	1-410-397-21	FERRITE 1.1µH

Downloaded from www.Manualslib.com manuals search engine

NOTE: The components identified by shading and ⚠ mark are critical for safety. Replace only with part number specified.

NOTE: Les composants identifies par un trame et une marque ⚠ sont critiques pour la securite. Ne les remplacer que par une piece portant le numero specifie.

G

	REF.NO.	PART NO.	DESCRIPTION	VALUES		
		IC				
⚠	IC601	8-729-045-41	TRANSISTOR MX0842B-F			
	IC622	8-759-450-47	IC BA05T			
	IC641	8-759-653-07	IC PQ09RD21			
	IC643	8-749-012-13	IC DM-58			
	IC650	8-759-394-35	IC BA12T			
		COIL				
	L642	1-412-529-11	INDUCTOR	22µH		
	L650	1-412-519-11	INDUCTOR	3.3µH		
	L651	1-412-519-11	INDUCTOR	3.3µH		
	L652	1-412-519-11	INDUCTOR	3.3µH		
		TRANSISTOR				
⚠	Q621	8-729-044-30	TRANSISTOR 2SK2845-LB102			
	Q622	8-729-423-33	TRANSISTOR 2SC3311A-QRSTA			
	Q623	8-729-423-33	TRANSISTOR 2SC3311A-QRSTA			
	Q624	8-729-119-76	TRANSISTOR 2SA1309A-QRSTA			
	Q644	8-729-423-33	TRANSISTOR 2SC3311A-QRSTA			
	Q645	8-729-119-76	TRANSISTOR 2SA1309A-QRSTA			
	Q646	8-729-119-76	TRANSISTOR 2SA1309A-QRSTA			
	Q647	8-729-423-33	TRANSISTOR 2SC3311A-QRSTA			
	Q648	8-729-922-39	TRANSISTOR 2SD2144S-TP-V			
	Q649	8-729-119-76	TRANSISTOR 2SA1309A-QRSTA			
	Q650	8-729-423-33	TRANSISTOR 2SC3311A-QRSTA			
	Q651	8-729-802-71	TRANSISTOR 2SA1407-E			
	Q652	8-729-119-76	TRANSISTOR 2SA1309A-QRSTA			
	Q653	8-729-423-33	TRANSISTOR 2SC3311A-QRSTA			
		RESISTOR				
⚠	R601	1-249-377-11	CARBON	0.47	5%	1/4W
	R602	1-249-429-11	CARBON	10K	5%	1/4W
⚠	R603	1-219-776-11	CARBON	2.2M	10%	1/2W
	R604	1-249-429-11	CARBON	10K	5%	1/4W
	R605	1-249-429-11	CARBON	10K	5%	1/4W
	R606	1-249-421-11	CARBON	2.2K	5%	1/4W
⚠	R607	1-202-933-61	FUSIBLE	0.1	10%	1/2W
	R608	1-216-369-00	METAL OXIDE	1	5%	2W
	R609	1-249-417-11	CARBON	1K	5%	1/4W
	R610	1-249-425-11	CARBON	4.7K	5%	1/4W
	R611	1-216-369-00	METAL OXIDE	1	5%	2W
	R612	1-260-124-11	CARBON	120K	5%	1/2W
	R613	1-260-124-11	CARBON	120K	5%	1/2W
	R614	1-260-124-11	CARBON	120K	5%	1/2W
	R615	1-260-124-11	CARBON	120K	5%	1/2W
	R618	1-249-425-11	CARBON	4.7K	5%	1/4W
	R619	1-249-425-11	CARBON	4.7K	5%	1/4W
	R621	1-249-429-11	CARBON	10K	5%	1/4W
	R622	1-249-433-11	CARBON	22K	5%	1/4W

	REF.NO.	PART NO.	DESCRIPTION	VALUES		
⚠	R623	1-240-257-11	CMT-MELF	3.9	5%	20W
⚠	R624	1-215-485-00	METAL	470K	1%	1/4W
⚠	R625	1-215-485-00	METAL	470K	1%	1/4W
	R626	1-249-425-11	CARBON	4.7K	5%	1/4W
	R627	1-249-405-11	CARBON	100	5%	1/4W
	R631	1-240-205-91	CARBON	22M	5%	1/2W
	R632	1-249-421-11	CARBON	2.2K	5%	1/4W
	R633	1-249-429-11	CARBON	10K	5%	1/4W
	R634	1-249-437-11	CARBON	47K	5%	1/4W
	R635	1-247-791-91	CARBON	22	5%	1/4W
	R636	1-249-415-11	CARBON	680	5%	1/4W
	R637	1-260-302-51	CARBON	6.8	5%	1/2W
	R638	1-249-413-11	CARBON	470	5%	1/4W
⚠	R639	1-249-389-11	CARBON	4.7	5%	1/4W
	R640	1-215-485-00	METAL	470K	1%	1/4W
	R641	1-247-843-11	CARBON	3.3K	5%	1/4W
	R642	1-247-843-11	CARBON	3.3K	5%	1/4W
	R643	1-260-298-51	CARBON	3.3	5%	1/2W
	R644	1-249-417-11	CARBON	1K	5%	1/4W
	R645	1-249-429-11	CARBON	10K	5%	1/4W
	R646	1-249-417-11	CARBON	1K	5%	1/4W
	R648	1-249-441-11	CARBON	100K	5%	1/4W
	R649	1-249-425-11	CARBON	4.7K	5%	1/4W
	R650	1-249-421-11	CARBON	2.2K	5%	1/4W
⚠	R652	1-216-363-00	METAL OXIDE	0.33	5%	2W
	R653	1-215-423-00	METAL	1.2K	1%	1/4W
	R654	1-215-481-00	METAL	330K	1%	1/4W
	R655	1-215-469-00	METAL	100K	1%	1/4W
	R656	1-249-427-11	CARBON	6.8K	5%	1/4W
	R657	1-249-421-11	CARBON	2.2K	5%	1/4W
	R659	1-249-429-11	CARBON	10K	5%	1/4W
	R660	1-249-393-11	CARBON	10	5%	1/4W
⚠	R661	1-249-419-11	CARBON	1.5K	5%	1/4W
	R662	1-215-485-00	METAL	470K	1%	1/4W
	R663	1-215-445-00	METAL	10K	1%	1/4W
⚠	R664	1-240-257-11	CMT-MELF	3.9	5%	20W
	R665	1-249-425-11	CARBON	4.7K	5%	1/4W
	R670	1-260-312-11	CARBON	47	5%	1/2W
	R671	1-260-312-11	CARBON	47	5%	1/2W
	R680	1-216-364-11	METAL OXIDE	0.39	5%	2W
	R681	1-216-365-00	METAL OXIDE	0.47	5%	2W
	R699	1-249-429-11	CARBON	10K	5%	1/4W
		RELAY				
⚠	RY600	1-755-266-11	RELAY, AC POWER			
⚠	RY601	1-755-198-11	RELAY			

Downloaded from www.Manualslib.com manuals search engine

NOTE: The components identified by shading and ⚠ mark are critical for safety. Replace only with part number specified.

NOTE: Les composants identifies par un trame et une marque ⚠ sont critiques pour la securite. Ne les remplacer que par une piece portant le numero specifie.

G HA HB HS

	REF.NO.	PART NO.	DESCRIPTION	VALUES		
			TRANSFORMER			
⚠	T601	1-426-717-11	TRANSFORMER, LINE FILTER (LFT)			
⚠	T602	1-426-717-11	TRANSFORMER, LINE FILTER (LFT)			
⚠	T603	1-429-992-11	TRANSFORMER, CONVERTER (PRT)			
⚠	T605	1-433-408-11	TRANSFORMER, CONVERTER (PIT)			
⚠	T621	1-431-852-11	TRANSFORMER, CONVERTER (SRT)			
			THERMISTOR			
⚠	THP603	1-803-629-11	THERMISTOR, POSITIVE			
			VARISTOR			
	VDR601	1-801-074-41	VARISTOR ERZV10D271			
⚠	VDR602	1-801-074-41	VARISTOR ERZV10D271			

HA

*		A-1372-634-A	**HA MOUNTED PC BOARD (KV-32FV27/36FV27 ONLY)**			
			CAPACITOR			
	C1234	1-126-960-11	ELECT	1µF	20%	50V
	C1235	1-126-960-11	ELECT	1µF	20%	50V
	C1239	1-216-295-91	SHORT			
			CONNECTOR			
*	CN1232	1-564-512-11	PLUG, CONNECTOR 9P			
	CN1234	1-564-505-11	PLUG, CONNECTOR 2P			
			DIODE			
	D1233	8-719-110-17	DIODE MTZJ-T-77-10B			
			JACK			
	J1231	1-770-361-11	TERMINAL BLOCK, S			
			RESISTOR			
	R201	1-216-049-11	RES-CHIP	1K	5%	1/10W
	R202	1-216-055-00	RES-CHIP	1.8K	5%	1/10W
	R203	1-216-065-91	RES-CHIP	4.7K	5%	1/10W
	R1233	1-216-065-91	RES-CHIP	4.7K	5%	1/10W
	R1235	1-216-065-91	RES-CHIP	4.7K	5%	1/10W
	R1236	1-216-113-00	RES-CHIP	470K	5%	1/10W
	R1237	1-216-065-91	RES-CHIP	4.7K	5%	1/10W
	R1238	1-216-113-00	RES-CHIP	470K	5%	1/10W
	R1240	1-216-295-91	SHORT			
			SWITCH			
	S2007	1-572-198-11	SWITCH KEYBOARD			
	S2008	1-572-198-11	SWITCH KEYBOARD			
	S2009	1-572-198-11	SWITCH KEYBOARD			
	S2010	1-572-198-11	SWITCH KEYBOARD			

HB

*		A-1372-635-A	**HB MOUNTED PC BOARD (KV-32FV27/36FV27 ONLY)**			
			CAPACITOR			
	C2001	1-104-665-11	ELECT	100µF	20%	25V
	C2002	1-164-096-11	CERAMIC	0.01µF		50V
			CONNECTOR			
*	CN2001	1-564-520-11	PLUG, CONNECTOR	5P		
			DIODE			
	D2002	8-719-057-09	DIODE LNJ801LPDJA			
	D2003	8-719-057-09	DIODE LNJ801LPDJA			
			IC			
	IC2001	8-742-211-20	HYB IC SBX3071-71			
			RESISTOR			
	R2001	1-216-049-11	RES-CHIP	1K	5%	1/10W
	R2002	1-216-049-11	RES-CHIP	1K	5%	1/10W
	R2003	1-216-017-91	RES-CHIP	47	5%	1/10W

HS

*		A-1372-822-A	**HS MOUNTED PC BOARD (KV-36FS13/36FS17/38FS17 ONLY)**			
			CAPACITOR			
	C1234	1-126-960-11	ELECT	1µF	20%	50V
	C1235	1-126-960-11	ELECT	1µF	20%	50V
	C2001	1-126-935-11	ELECT	470µF	20%	16V
	C2002	1-164-096-11	CERAMIC	0.01µF		50V
			CONNECTOR			
*	CN1232	1-564-512-11	PLUG, CONNECTOR 9P			
	CN1233	1-564-505-11	PLUG, CONNECTOR 2P			
*	CN2001	1-564-508-11	PLUG, CONNECTOR 5P			
			DIODE			
	D2002	8-719-070-80	DIODE LNK0120022G			
			IC			
	IC2001	8-742-212-20	HYB IC SBX3081-71			

Downloaded from www.Manualslib.com manuals search engine

HS HX T

REF.NO.	PART NO.	DESCRIPTION	VALUES		
	JACK				
J1231	1-691-110-11	JACK, PIN 3P			
	RESISTOR				
R201	1-249-417-11	CARBON	1K	5%	1/4W
R202	1-249-420-11	CARBON	1.8K	5%	1/4W
R203	1-249-425-11	CARBON	4.7K	5%	1/4W
R1235	1-249-425-11	CARBON	4.7K	5%	1/4W
R1236	1-247-895-91	CARBON	470K	5%	1/4W
R1237	1-249-425-11	CARBON	4.7K	5%	1/4W
R1238	1-247-895-91	CARBON	470K	5%	1/4W
R2003	1-249-401-11	CARBON	47	5%	1/4W
R2004	1-249-417-11	CARBON	1K	5%	1/4W
	SWITCH				
S2007	1-762-816-11	SWITCH TACTILE			
S2008	1-762-816-11	SWITCH TACTILE			

HX

*	**A-1372-636-A**	**HX MOUNTED PC BOARD**	
	CONNECTOR		
* CN2002	1-564-518-11	PLUG, CONNECTOR	3P
	RESISTOR		
R2010	1-216-047-91	RES-CHIP	820 5% 1/10W
R2011	1-216-049-11	RES-CHIP	1K 5% 1/10W
R2012	1-216-055-00	RES-CHIP	1.8K 5% 1/10W
R2013	1-216-065-91	RES-CHIP	4.7K 5% 1/10W
R2014	1-216-025-11	RES-CHIP	100 5% 1/10W
	SWITCH		
S2001	1-572-198-11	SWITCH KEYBOARD	
S2002	1-572-198-11	SWITCH KEYBOARD	
S2003	1-572-198-11	SWITCH KEYBOARD	
S2004	1-572-198-11	SWITCH KEYBOARD	
S2005	1-572-198-11	SWITCH KEYBOARD	
S2006	1-572-198-11	SWITCH KEYBOARD	

T

*	**A-1394-934-A**	**T COMPLETE PC BOARD (KV-32FV27/36FV27 ONLY)**	
	CAPACITOR		
C401	1-163-243-11	CERAMIC CHIP	47pF 5% 50V
C402	1-163-809-11	CERAMIC CHIP	0.047µF 10% 25V
C403	1-126-963-11	ELECT	4.7µF 20% 50V
C404	1-163-135-00	CERAMIC CHIP	560pF 5% 50V
C405	1-104-664-11	ELECT	47µF 20% 25V
C406	1-163-021-91	CERAMIC CHIP	0.01µF 10% 50V
C407	1-163-809-11	CERAMIC CHIP	0.047µF 10% 25V
C408	1-163-135-00	CERAMIC CHIP	560pF 5% 50V
C409	1-126-963-11	ELECT	4.7µF 20% 50V
C410	1-163-243-11	CERAMIC CHIP	47pF 5% 50V
C411	1-126-963-11	ELECT	4.7µF 20% 50V
C412	1-164-161-11	CERAMIC CHIP	0.0022µF 10% 50V
C413	1-164-161-11	CERAMIC CHIP	0.0022µF 10% 50V
C414	1-104-664-11	ELECT	47µF 20% 25V
C415	1-163-021-91	CERAMIC CHIP	0.01µF 10% 50V
C416	1-104-664-11	ELECT	47µF 20% 25V
C417	1-126-963-11	ELECT	4.7µF 20% 50V
C418	1-163-229-11	CERAMIC CHIP	12pF 5% 50V
C419	1-163-227-11	CERAMIC CHIP	10pF 0.50pF 50V
C420	1-163-021-91	CERAMIC CHIP	0.01µF 10% 50V
C421	1-163-021-91	CERAMIC CHIP	0.01µF 10% 50V
C422	1-104-664-11	ELECT	47µF 20% 25V
C423	1-163-021-91	CERAMIC CHIP	0.01µF 10% 50V
C424	1-163-021-91	CERAMIC CHIP	0.01µF 10% 50V
C425	1-104-664-11	ELECT	47µF 20% 25V
C426	1-163-021-91	CERAMIC CHIP	0.01µF 10% 50V
	CONNECTOR		
* CN401	1-564-519-11	PLUG, CONNECTOR 4P	
	DIODE		
D401	8-719-109-89	DIODE MTZJ-T-77-5.6C	
D402	8-719-057-93	DIODE SVC203SPA-AL	
D403	8-719-057-93	DIODE SVC203SPA-AL	
D404	8-719-992-13	DIODE DAL5815	
D405	8-719-992-13	DIODE DAL5815	
D406	8-719-992-13	DIODE DAL5815	
D407	8-719-992-13	DIODE DAL5815	
D408	8-719-992-13	DIODE DAL5815	
D409	8-719-992-13	DIODE DAL5815	
D410	8-719-992-13	DIODE DAL5815	
D411	8-719-992-13	DIODE DAL5815	
	IC		
IC401	8-759-939-73	IC BA3308	
	COIL		
L401	1-411-987-11	COIL (OSC)	
L402	1-411-988-11	COIL (OSC)	

Downloaded from www.Manualslib.com manuals search engine

T UX

REF.NO.	PART NO.	DESCRIPTION	VALUES		
	TRANSISTOR				
Q401	8-729-266-83	TRANSISTOR 2SC2668-YTP			
Q402	8-729-266-83	TRANSISTOR 2SC2668-YTP			
Q403	8-729-423-33	TRANSISTOR 2SC3311A-QRSTA			
Q404	8-729-216-22	TRANSISTOR 2SB709A-QRS-TX			
Q405	8-729-216-22	TRANSISTOR 2SB709A-QRS-TX			
Q406	8-729-931-14	TRANSISTOR 2SD1858-Q-TV2			
Q407	8-729-931-14	TRANSISTOR 2SD1858-Q-TV2			
Q408	8-729-931-14	TRANSISTOR 2SD1858-Q-TV2			
Q409	8-729-931-14	TRANSISTOR 2SD1858-Q-TV2			
Q410	8-729-216-22	TRANSISTOR 2SB709A-QRS-TX			
Q411	8-729-216-22	TRANSISTOR 2SB709A-QRS-TX			
	RESISTOR				
R401	1-216-089-11	RES-CHIP	47K	5%	1/10W
R402	1-216-089-11	RES-CHIP	47K	5%	1/10W
R403	1-216-089-11	RES-CHIP	47K	5%	1/10W
R404	1-216-053-00	RES-CHIP	1.5K	5%	1/10W
R405	1-216-025-11	RES-CHIP	100	5%	1/10W
R406	1-216-053-00	RES-CHIP	1.5K	5%	1/10W
R407	1-216-133-00	RES-CHIP	3.3M	5%	1/10W
R408	1-216-089-11	RES-CHIP	47K	5%	1/10W
R409	1-216-053-00	RES-CHIP	1.5K	5%	1/10W
R410	1-216-053-00	RES-CHIP	1.5K	5%	1/10W
R411	1-216-025-11	RES-CHIP	100	5%	1/10W
R412	1-208-803-11	METAL CHIP	7.5K	0.50%	1/10W
R413	1-216-065-91	RES-CHIP	4.7K	5%	1/10W
R414	1-216-073-00	RES-CHIP	10K	5%	1/10W
R415	1-249-411-11	CARBON	330	5%	1/4W
R416	1-216-081-00	RES-CHIP	22K	5%	1/10W
R417	1-216-081-00	RES-CHIP	22K	5%	1/10W
R418	1-216-065-91	RES-CHIP	4.7K	5%	1/10W
R419	1-216-073-00	RES-CHIP	10K	5%	1/10W
R420	1-216-111-00	RES-CHIP	390K	5%	1/10W
R421	1-216-025-11	RES-CHIP	100	5%	1/10W
R422	1-216-025-11	RES-CHIP	100	5%	1/10W
R423	1-216-111-00	RES-CHIP	390K	5%	1/10W
R424	1-216-053-00	RES-CHIP	1.5K	5%	1/10W
R425	1-216-061-00	RES-CHIP	3.3K	5%	1/10W
R426	1-208-821-11	METAL CHIP	43K	0.50%	1/10W
R427	1-216-061-00	RES-CHIP	3.3K	5%	1/10W
R428	1-216-057-00	RES-CHIP	2.2K	5%	1/10W
R429	1-216-057-00	RES-CHIP	2.2K	5%	1/10W
R430	1-208-790-11	METAL CHIP	2.2K	0.50%	1/10W
R431	1-208-790-11	METAL CHIP	2.2K	0.50%	1/10W
R432	1-208-821-11	METAL CHIP	43K	0.50%	1/10W
R433	1-216-059-00	RES-CHIP	2.7K	5%	1/10W
R434	1-216-059-00	RES-CHIP	2.7K	5%	1/10W
R435	1-216-001-00	RES-CHIP	10	5%	1/10W
R436	1-216-001-00	RES-CHIP	10	5%	1/10W
R437	1-216-001-00	RES-CHIP	10	5%	1/10W
R438	1-216-001-00	RES-CHIP	10	5%	1/10W
R439	1-216-059-00	RES-CHIP	2.7K	5%	1/10W
R460	1-216-059-00	RES-CHIP	2.7K	5%	1/10W

UX

*	A-1395-028-A	UX COMPLETE PC BOARD (KV-32FV27/36FV27 ONLY)	
	CAPACITOR		
C201	1-128-551-11	ELECT	22µF 20% 25V
C202	1-128-551-11	ELECT	22µF 20% 25V
C203	1-128-551-11	ELECT	22µF 20% 25V
C204	1-126-960-11	ELECT	1µF 20% 50V
C205	1-126-960-11	ELECT	1µF 20% 50V
C231	1-163-021-91	CERAMIC CHIP	0.01µF 10% 50V
C232	1-126-933-11	ELECT	100µF 20% 16V
C233	1-126-933-11	ELECT	100µF 20% 16V
C234	1-126-960-11	ELECT	1µF 20% 50V
C235	1-126-960-11	ELECT	1µF 20% 50V
C236	1-126-933-11	ELECT	100µF 20% 16V
C237	1-126-960-11	ELECT	1µF 20% 50V
C238	1-126-960-11	ELECT	1µF 20% 50V
C241	1-126-941-11	ELECT	470µF 20% 25V
C242	1-126-959-11	ELECT	0.47µF 20% 50V
C243	1-126-959-11	ELECT	0.47µF 20% 50V
C244	1-126-959-11	ELECT	0.47µF 20% 50V
C245	1-126-959-11	ELECT	0.47µF 20% 50V
C264	1-164-004-11	CERAMIC CHIP	0.1µF 10% 25V
C268	1-163-021-91	CERAMIC CHIP	0.01µF 10% 50V
C269	1-163-021-91	CERAMIC CHIP	0.01µF 10% 50V
C272	1-163-231-11	CERAMIC CHIP	15pF 5% 50V
C273	1-128-551-11	ELECT	22µF 20% 25V
C277	1-128-551-11	ELECT	22µF 20% 25V
C278	1-128-551-11	ELECT	22µF 20% 25V
C281	1-126-933-11	ELECT	100µF 20% 16V
C284	1-126-941-11	ELECT	470µF 20% 25V
C286	1-164-161-11	CERAMIC CHIP	0.0022µF 10% 50V
C287	1-164-161-11	CERAMIC CHIP	0.0022µF 10% 50V
C1051	1-126-964-11	ELECT	10µF 20% 50V
C1053	1-126-934-11	ELECT	220µF 20% 16V
C1201	1-163-809-11	CERAMIC CHIP	0.047µF 10% 25V
C1202	1-163-021-91	CERAMIC CHIP	0.01µF 10% 50V
C1203	1-126-960-11	ELECT	1µF 20% 50V
C1204	1-163-809-11	CERAMIC CHIP	0.047µF 10% 25V

Downloaded from www.Manualslib.com manuals search engine

UX

REF.NO.	PART NO.	DESCRIPTION	VALUES		
C1205	1-126-933-11	ELECT	100µF	20%	16V
C1207	1-126-963-11	ELECT	4.7µF	20%	50V
C1208	1-126-963-11	ELECT	4.7µF	20%	50V
C1209	1-163-259-91	CERAMIC CHIP	220pF	5%	50V
C1210	1-163-259-91	CERAMIC CHIP	220pF	5%	50V
C1211	1-126-933-11	ELECT	100µF	20%	16V
C1212	1-126-933-11	ELECT	100µF	20%	16V
C1214	1-163-021-91	CERAMIC CHIP	0.01µF	10%	50V
C1215	1-126-960-11	ELECT	1µF	20%	50V
C1997	1-163-031-11	CERAMIC CHIP	0.01µF		50V
C1998	1-104-664-11	ELECT	47µF	20%	16V
C1999	1-163-031-11	CERAMIC CHIP	0.01µF		50V
C2000	1-163-031-11	CERAMIC CHIP	0.01µF		50V
C2001	1-163-235-11	CERAMIC CHIP	22pF	5%	50V
C2002	1-126-933-11	ELECT	100µF	20%	16V
C2003	1-163-031-11	CERAMIC CHIP	0.01µF	50V	
C2004	1-163-235-11	CERAMIC CHIP	22pF	5%	50V
C2005	1-163-131-00	CERAMIC CHIP	390pF	5%	50V
C2006	1-163-038-11	CERAMIC CHIP	0.1µF		25V
C2007	1-126-926-11	ELECT	1000µF	20%	10V
C2008	1-163-038-11	CERAMIC CHIP	0.1µF		25V
C2009	1-163-102-00	CERAMIC CHIP	24pF	5%	50V
C2011	1-126-967-11	ELECT	47µF	20%	50V
C2013	1-163-038-11	CERAMIC CHIP	0.1µF		25V
C2014	1-163-009-11	CERAMIC CHIP	0.001µF	10%	50V
C2015	1-216-295-11	SHORT			
C2016	1-165-319-11	CERAMIC CHIP	0.1µF		50V
C2017	1-163-102-00	CERAMIC CHIP	24pF	5%	50V
C2018	1-165-319-11	CERAMIC CHIP	0.1µF		50V
C2019	1-126-960-11	ELECT	1µF	20%	50V
C2020	1-165-319-11	CERAMIC CHIP	0.1µF		50V
C2021	1-163-038-11	CERAMIC CHIP	0.1µF		25V
C2022	1-163-031-11	CERAMIC CHIP	0.01µF		50V
C2023	1-126-967-11	ELECT	47µF	20%	50V
C2024	1-216-295-11	SHORT			
C2025	1-163-031-11	CERAMIC CHIP	0.01µF		50V
C2026	1-126-967-11	ELECT	47µF	20%	50V
C2027	1-163-031-11	CERAMIC CHIP	0.01µF		50V
C2028	1-126-941-11	ELECT	470µF	20%	25V
C2029	1-165-319-11	CERAMIC CHIP	0.1µF		50V
C2030	1-165-319-11	CERAMIC CHIP	0.1µF		50V
C2031	1-165-319-11	CERAMIC CHIP	0.1µF		50V
C2032	1-165-319-11	CERAMIC CHIP	0.1µF		50V
C2033	1-165-319-11	CERAMIC CHIP	0.1µF		50V
C2034	1-165-319-11	CERAMIC CHIP	0.1µF		50V
C2035	1-165-319-11	CERAMIC CHIP	0.1µF		50V
C2036	1-165-319-11	CERAMIC CHIP	0.1µF		50V
C2037	1-104-664-11	ELECT	47µF	20%	16V
C2038	1-165-319-11	CERAMIC CHIP	0.1µF		50V
C2039	1-165-319-11	CERAMIC CHIP	0.1µF		50V
C2040	1-165-319-11	CERAMIC CHIP	0.1µF		50V
C2041	1-126-940-11	ELECT	330µF	20%	25V
C2042	1-165-319-11	CERAMIC CHIP	0.1µF		50V
C2044	1-104-664-11	ELECT	47µF	20%	16V
C2045	1-163-233-11	CERAMIC CHIP	18pF	5%	50V
C2046	1-126-964-11	ELECT	10µF	20%	50V
C2047	1-164-505-11	CERAMIC CHIP	2.2µF		16V
C2048	1-126-964-11	ELECT	10µF	20%	50V
C2049	1-126-960-11	ELECT	1µF	20%	50V
C2050	1-163-231-11	CERAMIC CHIP	15pF	5%	50V
C2051	1-126-964-11	ELECT	10µF	20%	50V
C2052	1-163-133-00	CERAMIC CHIP	470pF	5%	50V
C2053	1-126-960-11	ELECT	1µF	20%	50V
C2054	1-104-664-11	ELECT	47µF	20%	16V
C2055	1-165-319-11	CERAMIC CHIP	0.1µF		50V
C2056	1-163-231-11	CERAMIC CHIP	15pF	5%	50V
C2057	1-163-031-11	CERAMIC CHIP	0.01µF		50V
C2060	1-163-031-11	CERAMIC CHIP	0.01µF		50V
C2061	1-126-941-11	ELECT	470µF	20%	25V
C2062	1-104-664-11	ELECT	47µF	20%	16V
C2063	1-165-319-11	CERAMIC CHIP	0.1µF		50V
C2064	1-163-031-11	CERAMIC CHIP	0.01µF		50V
C2065	1-163-031-11	CERAMIC CHIP	0.01µF		50V
C2066	1-104-664-11	ELECT	47µF	20%	16V
C2067	1-104-664-11	ELECT	47µF	20%	16V
C2068	1-104-664-11	ELECT	47µF	20%	16V
C2069	1-163-031-11	CERAMIC CHIP	0.01µF		50V
C2070	1-104-664-11	ELECT	47µF	20%	16V
C2071	1-165-319-11	CERAMIC CHIP	0.1µF		50V
C2072	1-126-933-11	ELECT	100µF	20%	16V
C2073	1-163-275-11	CERAMIC CHIP	0.001µF	5%	50V
C2074	1-163-275-11	CERAMIC CHIP	0.001µF	5%	50V
C2090	1-126-964-11	ELECT	10µF	20%	50V
C2095	1-163-231-11	CERAMIC CHIP	15pF	5%	50V
C2096	1-163-231-11	CERAMIC CHIP	15pF	5%	50V
C2097	1-163-231-11	CERAMIC CHIP	15pF	5%	50V
C2129	1-165-319-11	CERAMIC CHIP	0.1µF		50V
C2137	1-165-319-11	CERAMIC CHIP	0.1µF		50V
C2201	1-126-965-11	ELECT	22µF	20%	50V
C2202	1-126-933-11	ELECT	100µF	20%	16V
C2203	1-163-021-91	CERAMIC CHIP	0.01µF	10%	50V
C3301	1-104-664-11	ELECT	47µF	20%	25V
C3302	1-163-031-11	CERAMIC CHIP	0.01µF		50V
C3303	1-126-961-11	ELECT	2.2µF	20%	50V

Downloaded from www.Manualslib.com manuals search engine

NOTE: The components identified by shading and ⚠ mark are critical for safety. Replace only with part number specified.

NOTE: Les composants identifies par un trame et une marque ⚠ sont critiques pour la securite. Ne les remplacer que par une piece portant le numero specifie.

UX

REF.NO.	PART NO.	DESCRIPTION	VALUES		
C3304	1-163-038-11	CERAMIC CHIP	0.1µF		25V
C3305	1-126-961-11	ELECT	2.2µF	20%	50V
C3306	1-163-038-11	CERAMIC CHIP	0.1µF		25V
C3307	1-126-964-11	ELECT	10µF	20%	50V
C3308	1-163-038-11	CERAMIC CHIP	0.1µF		25V
C3309	1-126-964-11	ELECT	10µF	20%	50V
C3311	1-163-038-11	CERAMIC CHIP	0.1µF		25V
C3312	1-126-964-11	ELECT	10µF	20%	50V
C3313	1-163-038-11	CERAMIC CHIP	0.1µF		25V
C3315	1-216-295-11	SHORT			
C3316	1-216-295-11	SHORT			
C3317	1-104-666-11	ELECT	220µF	20%	25V
C3318	1-163-038-11	CERAMIC CHIP	0.1µF		25V
C3319	1-163-031-11	CERAMIC CHIP	0.01µF		50V
C3320	1-104-664-11	ELECT	47µF	20%	16V
C3321	1-163-237-11	CERAMIC CHIP	27pF	5%	50V
C3322	1-163-237-11	CERAMIC CHIP	27pF	5%	50V
C3323	1-163-038-11	CERAMIC CHIP	0.1µF		25V
C3325	1-104-660-91	ELECT	47µF	20%	16V
C3327	1-126-941-11	ELECT	470µF	20%	25V
C3328	1-126-941-11	ELECT	470µF	20%	25V
C3329	1-104-660-91	ELECT	47µF	20%	16V
C3349	1-163-123-00	CERAMIC CHIP	180pF	5%	50V
C3350	1-164-004-11	CERAMIC CHIP	0.1µF	10%	25V
C3354	1-163-031-11	CERAMIC CHIP	0.01µF		50V
C3357	1-163-031-11	CERAMIC CHIP	0.01µF		50V
C3358	1-163-031-11	CERAMIC CHIP	0.01µF		50V
C3368	1-216-295-11	SHORT			
C3369	1-163-031-11	CERAMIC CHIP	0.01µF		50V
C3370	1-163-031-11	CERAMIC CHIP	0.01µF		50V
C3371	1-163-031-11	CERAMIC CHIP	0.01µF		50V

CONNECTOR

*	CN261	1-564-510-11	PLUG, CONNECTOR 7P
*	CN265	1-764-333-11	PLUG, CONNECTOR 10P

DIODE

D201	8-719-032-47	DIODE MTZJ-T-9110
D202	8-719-032-47	DIODE MTZJ-T-9110
D203	8-719-032-47	DIODE MTZJ-T-9110
D204	8-719-032-47	DIODE MTZJ-T-9110
D205	8-719-032-47	DIODE MTZJ-T-9110
D231	8-719-032-47	DIODE MTZJ-T-9110
D232	8-719-032-47	DIODE MTZJ-T-9110
D233	8-719-032-47	DIODE MTZJ-T-9110
D234	8-719-032-47	DIODE MTZJ-T-9110
D235	8-719-032-47	DIODE MTZJ-T-9110
D236	8-719-032-47	DIODE MTZJ-T-9110
D237	8-719-032-47	DIODE MTZJ-T-9110
D238	8-719-032-47	DIODE MTZJ-T-9110
D239	8-719-032-47	DIODE MTZJ-T-9110
D245	8-719-157-94	DIODE RD3.3SB-T1
D246	8-719-157-94	DIODE RD3.3SB-T1
D248	8-719-157-94	DIODE RD3.3SB-T1
D261	8-719-032-47	DIODE MTZJ-T-9110
D902	8-719-032-47	DIODE MTZJ-T-9110
D910	8-719-032-47	DIODE MTZJ-T-9110
D911	8-719-032-47	DIODE MTZJ-T-9110
D912	8-719-032-47	DIODE MTZJ-T-9110
D1051	8-719-073-01	DIODE MA111-TX
D1052	8-719-073-01	DIODE MA111-TX
D1053	1-216-295-11	SHORT
D1054	1-216-295-11	SHORT
D2201	8-719-032-47	DIODE MTZJ-T-9110
D2202	8-719-032-47	DIODE MTZJ-T-9110
D2203	8-719-032-47	DIODE MTZJ-T-9110

FERRITE BEAD

FB2003	1-414-233-22	FERRITE	0µH
FB2004	1-414-230-22	FERRITE	0µH
FB2006	1-414-230-22	FERRITE	0µH
FB2007	1-414-230-22	FERRITE	0µH
FB2008	1-414-230-22	FERRITE	0µH
FB2009	1-414-233-22	FERRITE	0µH
FB3301	1-216-295-11	SHORT	
FB3302	1-414-230-22	FERRITE	0µH
FB3303	1-414-230-22	FERRITE	0µH
FB3304	1-414-230-22	FERRITE	0µH
FB3305	1-414-230-22	FERRITE	0µH

FILTER

FL2001	1-239-848-21	FILTER, LOW PASS
FL2002	1-239-848-21	FILTER, LOW PASS
FL2003	1-239-848-21	FILTER, LOW PASS
FL2004	1-239-848-21	FILTER, LOW PASS

IC

	IC261	8-752-066-69	IC CXA1845Q
	IC1051	8-752-058-68	IC CXA1315M-T4
	IC2003	8-759-831-86	IC IS41C16256-35K
⚠	IC2004	8-759-594-44	IC UPD64082GF-3BA
	IC2005	8-759-559-82	IC UPC29M33T-E1
	IC2006	8-759-358-38	IC NJM78M05DLA(TE1)
	IC2009	8-752-395-13	IC CXD2085M-T4
	IC3302	8-759-358-38	IC NJM78M05DLA(TE1)
⚠	IC3303	8-759-830-24	IC SDA9588XB23
	IC3308	8-759-932-69	IC BU4053BCF-T2
	IC3310	8-759-559-82	IC UPC29M33T-E1

Downloaded from www.Manualslib.com manuals search engine

UX

REF.NO.	PART NO.	DESCRIPTION	VALUES
	JACK		
J231	1-750-515-11	TERMINAL BLOCK, S 3P	
J232	1-750-517-11	JACK BLOCK, PIN 3P	
J233	1-750-516-11	JACK BLOCK, PIN 2P	
J234	1-750-517-11	JACK BLOCK, PIN 3P	
J236	1-774-358-11	JACK BLOCK, PIN	
J902	1-764-143-11	JACK	
J903	1-764-143-11	JACK	
J904	1-764-143-11	JACK	
J905	1-764-143-11	JACK	
	CHIP CONDUCTOR		
JR1001	1-216-295-11	SHORT	
JR1002	1-216-295-11	SHORT	
JR1003	1-216-295-11	SHORT	
JR1004	1-216-295-11	SHORT	
JR1021	1-216-295-11	SHORT	
JR1022	1-216-295-11	SHORT	
JR1023	1-216-295-11	SHORT	
JR2009	1-216-295-11	SHORT	
JR2010	1-216-295-11	SHORT	
JR2011	1-216-295-11	SHORT	
JR2012	1-216-295-11	SHORT	
JR2013	1-216-295-11	SHORT	
JR2014	1-216-295-11	SHORT	
JR3014	1-216-295-11	SHORT	
	COIL		
L261	1-414-857-11	INDUCTOR	100µH
L1201	1-408-591-11	INDUCTOR	1µH
L1202	1-408-591-11	INDUCTOR	1µH
L1203	1-408-591-11	INDUCTOR	1µH
L2001	1-412-056-11	INDUCTOR	4.7µH
L2002	1-412-058-11	INDUCTOR	10µH
L2004	1-412-058-11	INDUCTOR	10µH
L2005	1-410-494-11	INDUCTOR	1MH
L2006	1-412-058-11	INDUCTOR	10µH
L2011	1-410-116-11	INDUCTOR	560µH
L2012	1-410-116-11	INDUCTOR	560µH
L3301	1-414-856-11	INDUCTOR	10µH
L3302	1-410-473-11	INDUCTOR	18µH
L3303	1-410-476-11	INDUCTOR	33µH
L3304	1-414-856-11	INDUCTOR	10µH
L3305	1-414-856-11	INDUCTOR	10µH
L3306	1-414-856-11	INDUCTOR	10µH
L3307	1-414-856-11	INDUCTOR	10µH
L3308	1-414-856-11	INDUCTOR	10µH

REF.NO.	PART NO.	DESCRIPTION	VALUES
	TRANSISTOR		
Q201	8-729-422-27	TRANSISTOR 2SD601A-QRS-TX	
Q202	8-729-422-27	TRANSISTOR 2SD601A-QRS-TX	
Q203	8-729-422-27	TRANSISTOR 2SD601A-QRS-TX	
Q204	8-729-216-22	TRANSISTOR 2SB709A-QRS-TX	
Q205	8-729-216-22	TRANSISTOR 2SB709A-QRS-TX	
Q206	8-729-216-22	TRANSISTOR 2SB709A-QRS-TX	
Q207	8-729-422-27	TRANSISTOR 2SD601A-QRS-TX	
Q208	8-729-422-27	TRANSISTOR 2SD601A-QRS-TX	
Q209	8-729-422-27	TRANSISTOR 2SD601A-QRS-TX	
Q210	8-729-422-27	TRANSISTOR 2SD601A-QRS-TX	
Q211	8-729-422-27	TRANSISTOR 2SD601A-QRS-TX	
Q231	8-729-422-27	TRANSISTOR 2SD601A-QRS-TX	
Q233	8-729-422-27	TRANSISTOR 2SD601A-QRS-TX	
Q234	8-729-422-27	TRANSISTOR 2SD601A-QRS-TX	
Q235	8-729-422-27	TRANSISTOR 2SD601A-QRS-TX	
Q236	8-729-422-27	TRANSISTOR 2SD601A-QRS-TX	
Q237	8-729-216-22	TRANSISTOR 2SB709A-QRS-TX	
Q238	8-729-216-22	TRANSISTOR 2SB709A-QRS-TX	
Q239	8-729-216-22	TRANSISTOR 2SB709A-QRS-TX	
Q246	8-729-422-27	TRANSISTOR 2SD601A-QRS-TX	
Q262	8-729-216-22	TRANSISTOR 2SB709A-QRS-TX	
Q263	8-729-216-22	TRANSISTOR 2SB709A-QRS-TX	
Q264	8-729-216-22	TRANSISTOR 2SB709A-QRS-TX	
Q265	8-729-422-27	TRANSISTOR 2SD601A-QRS-TX	
Q268	8-729-216-22	TRANSISTOR 2SB709A-QRS-TX	
Q1051	8-729-216-22	TRANSISTOR 2SB709A-QRS-TX	
Q1201	8-729-216-22	TRANSISTOR 2SB709A-QRS-TX	
Q1202	8-729-422-27	TRANSISTOR 2SD601A-QRS-TX	
Q1203	8-729-422-27	TRANSISTOR 2SD601A-QRS-TX	
Q1204	8-729-216-22	TRANSISTOR 2SB709A-QRS-TX	
Q1205	8-729-422-27	TRANSISTOR 2SD601A-QRS-TX	
Q1206	8-729-422-27	TRANSISTOR 2SD601A-QRS-TX	
Q1207	8-729-216-22	TRANSISTOR 2SB709A-QRS-TX	
Q1208	8-729-216-22	TRANSISTOR 2SB709A-QRS-TX	
Q2001	8-729-422-27	TRANSISTOR 2SD601A-QRS-TX	
Q2003	8-729-216-22	TRANSISTOR 2SB709A-QRS-TX	
Q2004	8-729-216-22	TRANSISTOR 2SB709A-QRS-TX	
Q2005	8-729-422-27	TRANSISTOR 2SD601A-QRS-TX	
Q2006	8-729-422-27	TRANSISTOR 2SD601A-QRS-TX	
Q2007	8-729-422-27	TRANSISTOR 2SD601A-QRS-TX	
Q2008	8-729-422-27	TRANSISTOR 2SD601A-QRS-TX	
Q2009	8-729-422-27	TRANSISTOR 2SD601A-QRS-TX	
Q2010	8-729-422-27	TRANSISTOR 2SD601A-QRS-TX	
Q2011	8-729-422-27	TRANSISTOR 2SD601A-QRS-TX	
Q2012	8-729-216-22	TRANSISTOR 2SB709A-QRS-TX	
Q2013	8-729-216-22	TRANSISTOR 2SB709A-QRS-TX	

Downloaded from www.Manualslib.com manuals search engine

REF.NO.	PART NO.	DESCRIPTION	VALUES		
Q2014	8-729-422-27	TRANSISTOR 2SD601A-QRS-TX			
Q2015	8-729-422-27	TRANSISTOR 2SD601A-QRS-TX			
Q2016	8-729-422-27	TRANSISTOR 2SD601A-QRS-TX			
Q2017	8-729-422-27	TRANSISTOR 2SD601A-QRS-TX			
Q2018	8-729-216-22	TRANSISTOR 2SB709A-QRS-TX			
Q2019	8-729-422-27	TRANSISTOR 2SD601A-QRS-TX			
Q2119	8-729-216-22	TRANSISTOR 2SB709A-QRS-TX			
Q3301	8-729-422-27	TRANSISTOR 2SD601A-QRS-TX			
Q3306	8-729-424-02	TRANSISTOR 2SB709A-QRS-TX			
Q3307	8-729-424-02	TRANSISTOR 2SB709A-QRS-TX			
Q3312	8-729-424-02	TRANSISTOR 2SB709A-QRS-TX			
Q3315	8-729-424-02	TRANSISTOR 2SB709A-QRS-TX			
Q3316	8-729-424-02	TRANSISTOR 2SB709A-QRS-TX			
Q3317	8-729-422-27	TRANSISTOR 2SD601A-QRS-TX			

RESISTOR

R201	1-216-022-00	RES-CHIP	75	5%	1/10W
R202	1-216-022-00	RES-CHIP	75	5%	1/10W
R203	1-216-022-00	RES-CHIP	75	5%	1/10W
R204	1-216-113-00	RES-CHIP	470K	5%	1/10W
R205	1-216-113-00	RES-CHIP	470K	5%	1/10W
R206	1-216-295-11	SHORT			
R207	1-216-295-11	SHORT			
R208	1-216-295-11	SHORT			
R209	1-216-089-11	RES-CHIP	47K	5%	1/10W
R210	1-216-081-00	RES-CHIP	22K	5%	1/10W
R211	1-216-089-11	RES-CHIP	47K	5%	1/10W
R212	1-216-081-00	RES-CHIP	22K	5%	1/10W
R213	1-216-089-11	RES-CHIP	47K	5%	1/10W
R214	1-216-081-00	RES-CHIP	22K	5%	1/10W
R215	1-216-049-11	RES-CHIP	1K	5%	1/10W
R216	1-216-025-11	RES-CHIP	100	5%	1/10W
R218	1-208-774-11	METAL CHIP	470	0.50%	1/10W
R219	1-216-049-11	RES-CHIP	1K	5%	1/10W
R220	1-216-025-11	RES-CHIP	100	5%	1/10W
R221	1-208-774-11	METAL CHIP	470	0.50%	1/10W
R222	1-216-049-11	RES-CHIP	1K	5%	1/10W
R223	1-216-025-11	RES-CHIP	100	5%	1/10W
R224	1-216-025-11	RES-CHIP	100	5%	1/10W
R225	1-216-025-11	RES-CHIP	100	5%	1/10W
R226	1-216-025-11	RES-CHIP	100	5%	1/10W
R227	1-216-041-00	RES-CHIP	470	5%	1/10W
R228	1-216-049-11	RES-CHIP	1K	5%	1/10W
R229	1-216-049-11	RES-CHIP	1K	5%	1/10W
R230	1-216-089-11	RES-CHIP	47K	5%	1/10W
R231	1-216-022-00	RES-CHIP	75	5%	1/10W
R232	1-216-022-00	RES-CHIP	75	5%	1/10W
R233	1-216-065-91	RES-CHIP	4.7K	5%	1/10W
R234	1-216-022-00	RES-CHIP	75	5%	1/10W
R235	1-216-113-00	RES-CHIP	470K	5%	1/10W
R236	1-216-113-00	RES-CHIP	470K	5%	1/10W
R237	1-216-022-00	RES-CHIP	75	5%	1/10W
R238	1-216-113-00	RES-CHIP	470K	5%	1/10W
R239	1-216-113-00	RES-CHIP	470K	5%	1/10W
R241	1-216-113-00	RES-CHIP	470K	5%	1/10W
R242	1-216-049-11	RES-CHIP	1K	5%	1/10W
R243	1-216-113-00	RES-CHIP	470K	5%	1/10W
R244	1-216-049-11	RES-CHIP	1K	5%	1/10W
R245	1-216-022-00	RES-CHIP	75	5%	1/10W
R246	1-216-113-00	RES-CHIP	470K	5%	1/10W
R247	1-216-113-00	RES-CHIP	470K	5%	1/10W
R248	1-216-113-00	RES-CHIP	470K	5%	1/10W
R249	1-216-065-91	RES-CHIP	4.7K	5%	1/10W
R250	1-216-065-91	RES-CHIP	4.7K	5%	1/10W
R251	1-216-065-91	RES-CHIP	4.7K	5%	1/10W
R252	1-216-049-11	RES-CHIP	1K	5%	1/10W
R254	1-216-049-11	RES-CHIP	1K	5%	1/10W
R257	1-216-049-11	RES-CHIP	1K	5%	1/10W
R258	1-216-057-00	RES-CHIP	2.2K	5%	1/10W
R259	1-216-049-11	RES-CHIP	1K	5%	1/10W
R260	1-216-057-00	RES-CHIP	2.2K	5%	1/10W
R261	1-216-025-11	RES-CHIP	100	5%	1/10W
R262	1-216-067-00	RES-CHIP	5.6K	5%	1/10W
R263	1-216-025-11	RES-CHIP	100	5%	1/10W
R264	1-216-067-00	RES-CHIP	5.6K	5%	1/10W
R265	1-216-025-11	RES-CHIP	100	5%	1/10W
R266	1-216-025-11	RES-CHIP	100	5%	1/10W
R267	1-216-025-11	RES-CHIP	100	5%	1/10W
R268	1-216-067-00	RES-CHIP	5.6K	5%	1/10W
R269	1-216-067-00	RES-CHIP	5.6K	5%	1/10W
R270	1-216-049-11	RES-CHIP	1K	5%	1/10W
R271	1-216-067-00	RES-CHIP	5.6K	5%	1/10W
R272	1-216-025-11	RES-CHIP	100	5%	1/10W
R273	1-216-067-00	RES-CHIP	5.6K	5%	1/10W
R274	1-216-049-11	RES-CHIP	1K	5%	1/10W
R275	1-216-025-11	RES-CHIP	100	5%	1/10W
R276	1-216-295-11	SHORT			
R278	1-216-067-00	RES-CHIP	5.6K	5%	1/10W
R279	1-216-025-11	RES-CHIP	100	5%	1/10W
R280	1-216-067-00	RES-CHIP	5.6K	5%	1/10W
R281	1-216-025-11	RES-CHIP	100	5%	1/10W
R282	1-216-025-11	RES-CHIP	100	5%	1/10W
R283	1-216-049-11	RES-CHIP	1K	5%	1/10W
R284	1-216-033-00	RES-CHIP	220	5%	1/10W
R285	1-216-033-00	RES-CHIP	220	5%	1/10W

Downloaded from www.Manualslib.com manuals search engine

UX

REF.NO.	PART NO.	DESCRIPTION	VALUES		
R286	1-216-067-00	RES-CHIP	5.6K	5%	1/10W
R287	1-216-025-11	RES-CHIP	100	5%	1/10W
R288	1-216-067-00	RES-CHIP	5.6K	5%	1/10W
R289	1-216-067-00	RES-CHIP	5.6K	5%	1/10W
R290	1-216-025-11	RES-CHIP	100	5%	1/10W
R291	1-216-067-00	RES-CHIP	5.6K	5%	1/10W
R293	1-216-025-11	RES-CHIP	100	5%	1/10W
R294	1-216-077-91	RES-CHIP	15K	5%	1/10W
R295	1-216-025-11	RES-CHIP	100	5%	1/10W
R296	1-216-025-11	RES-CHIP	100	5%	1/10W
R297	1-216-025-11	RES-CHIP	100	5%	1/10W
R300	1-216-025-11	RES-CHIP	100	5%	1/10W
R301	1-216-049-11	RES-CHIP	1K	5%	1/10W
R302	1-216-295-11	SHORT			
R902	1-249-405-11	CARBON	100	5%	1/4W
R921	1-249-405-11	CARBON	100	5%	1/4W
R923	1-249-405-11	CARBON	100	5%	1/4W
R925	1-249-405-11	CARBON	100	5%	1/4W
R926	1-216-049-11	RES-CHIP	1K	5%	1/10W
R1051	1-216-073-00	RES-CHIP	10K	5%	1/10W
R1052	1-216-073-00	RES-CHIP	10K	5%	1/10W
R1054	1-216-025-11	RES-CHIP	100	5%	1/10W
R1057	1-216-025-11	RES-CHIP	100	5%	1/10W
R1058	1-216-025-11	RES-CHIP	100	5%	1/10W
R1059	1-216-065-91	RES-CHIP	4.7K	5%	1/10W
R1062	1-216-033-00	RES-CHIP	220	5%	1/10W
R1063	1-216-073-00	RES-CHIP	10K	5%	1/10W
R1064	1-216-073-00	RES-CHIP	10K	5%	1/10W
R1065	1-216-025-11	RES-CHIP	100	5%	1/10W
R1201	1-216-025-11	RES-CHIP	100	5%	1/10W
R1202	1-216-025-11	RES-CHIP	100	5%	1/10W
R1204	1-216-295-11	SHORT			
R1206	1-216-295-11	SHORT			
R1208	1-216-049-11	RES-CHIP	1K	5%	1/10W
R1209	1-216-295-11	SHORT			
R1210	1-216-295-11	SHORT			
R1212	1-216-295-11	SHORT			
R1213	1-216-295-11	SHORT			
R1215	1-208-774-11	METAL CHIP	470	0.50%	1/10W
R1216	1-216-057-00	RES-CHIP	2.2K	5%	1/10W
R1217	1-216-091-00	RES-CHIP	56K	5%	1/10W
R1219	1-216-073-00	RES-CHIP	10K	5%	1/10W
R1220	1-216-013-00	RES-CHIP	33	5%	1/10W
R1221	1-216-121-11	RES-CHIP	1M	5%	1/10W
R1222	1-216-073-00	RES-CHIP	10K	5%	1/10W
R1223	1-216-097-11	RES-CHIP	100K	5%	1/10W
R1224	1-216-089-11	RES-CHIP	47K	5%	1/10W
R1225	1-216-097-11	RES-CHIP	100K	5%	1/10W

REF.NO.	PART NO.	DESCRIPTION	VALUES		
R1227	1-216-073-00	RES-CHIP	10K	5%	1/10W
R1228	1-208-774-11	METAL CHIP	470	0.50%	1/10W
R1229	1-216-121-11	RES-CHIP	1M	5%	1/10W
R1230	1-216-073-00	RES-CHIP	10K	5%	1/10W
R1233	1-216-097-11	RES-CHIP	100K	5%	1/10W
R1234	1-216-091-00	RES-CHIP	56K	5%	1/10W
R1235	1-216-013-00	RES-CHIP	33	5%	1/10W
R1236	1-216-097-11	RES-CHIP	100K	5%	1/10W
R1237	1-216-089-11	RES-CHIP	47K	5%	1/10W
R1238	1-216-057-00	RES-CHIP	2.2K	5%	1/10W
R1240	1-216-295-11	SHORT			
R1242	1-216-065-91	RES-CHIP	4.7K	5%	1/10W
R1243	1-216-065-91	RES-CHIP	4.7K	5%	1/10W
R1244	1-216-049-11	RES-CHIP	1K	5%	1/10W
R1245	1-216-049-11	RES-CHIP	1K	5%	1/10W
R1261	1-216-025-11	RES-CHIP	100	5%	1/10W
R1263	1-216-295-11	SHORT			
R1264	1-216-049-11	RES-CHIP	1K	5%	1/10W
R1265	1-216-001-00	RES-CHIP	10	5%	1/10W
R1266	1-216-041-00	RES-CHIP	470	5%	1/10W
R1267	1-216-025-11	RES-CHIP	100	5%	1/10W
R1268	1-216-049-11	RES-CHIP	1K	5%	1/10W
R1269	1-216-041-00	RES-CHIP	470	5%	1/10W
R1270	1-216-049-11	RES-CHIP	1K	5%	1/10W
R1271	1-216-001-00	RES-CHIP	10	5%	1/10W
R1272	1-216-655-11	METAL CHIP	1.5K	0.50%	1/10W
R1273	1-208-788-11	METAL CHIP	1.8K	0.50%	1/10W
R1276	1-216-049-11	RES-CHIP	1K	5%	1/10W
R1277	1-216-025-11	RES-CHIP	100	5%	1/10W
R1279	1-216-025-11	RES-CHIP	100	5%	1/10W
R1281	1-216-295-11	SHORT			
R1285	1-216-041-00	RES-CHIP	470	5%	1/10W
R1287	1-216-295-11	SHORT			
R1288	1-216-295-11	SHORT			
R1289	1-216-295-11	SHORT			
R1290	1-216-295-11	SHORT			
R1291	1-216-295-11	SHORT			
R1292	1-216-295-11	SHORT			
R1293	1-216-049-11	RES-CHIP	1K	5%	1/10W
R1294	1-216-049-11	RES-CHIP	1K	5%	1/10W
R1295	1-216-049-11	RES-CHIP	1K	5%	1/10W
R1300	1-216-049-11	RES-CHIP	1K	5%	1/10W
R1304	1-216-041-00	RES-CHIP	470	5%	1/10W
R1305	1-208-776-11	METAL CHIP	560	0.50%	1/10W
R1306	1-216-025-11	RES-CHIP	100	5%	1/10W
R1307	1-216-041-00	RES-CHIP	470	5%	1/10W
R1308	1-208-776-11	METAL CHIP	560	0.50%	1/10W
R1309	1-216-025-11	RES-CHIP	100	5%	1/10W

Downloaded from www.Manualslib.com manuals search engine

UX

REF.NO.	PART NO.	DESCRIPTION	VALUES		
R2001	1-216-073-00	RES-CHIP	10K	5%	1/10W
R2002	1-216-073-00	RES-CHIP	10K	5%	1/10W
R2003	1-216-085-00	RES-CHIP	33K	5%	1/10W
R2004	1-216-057-00	RES-CHIP	2.2K	5%	1/10W
R2005	1-216-295-11	SHORT			
R2006	1-216-065-91	RES-CHIP	4.7K	5%	1/10W
R2007	1-216-041-00	RES-CHIP	470	5%	1/10W
R2008	1-216-025-11	RES-CHIP	100	5%	1/10W
R2009	1-216-025-11	RES-CHIP	100	5%	1/10W
R2010	1-216-001-00	RES-CHIP	10	5%	1/10W
R2011	1-216-041-00	RES-CHIP	470	5%	1/10W
R2015	1-216-081-00	RES-CHIP	22K	5%	1/10W
R2016	1-216-081-00	RES-CHIP	22K	5%	1/10W
R2017	1-216-295-11	SHORT			
R2018	1-216-295-11	SHORT			
R2019	1-216-295-11	SHORT			
R2022	1-216-049-11	RES-CHIP	1K	5%	1/10W
R2023	1-216-049-11	RES-CHIP	1K	5%	1/10W
R2024	1-216-097-11	RES-CHIP	100K	5%	1/10W
R2027	1-216-049-11	RES-CHIP	1K	5%	1/10W
R2028	1-216-049-11	RES-CHIP	1K	5%	1/10W
R2029	1-216-043-91	RES-CHIP	560	5%	1/10W
R2030	1-216-043-91	RES-CHIP	560	5%	1/10W
R2031	1-216-067-00	RES-CHIP	5.6K	5%	1/10W
R2032	1-216-067-00	RES-CHIP	5.6K	5%	1/10W
R2033	1-216-057-00	RES-CHIP	2.2K	5%	1/10W
R2034	1-216-057-00	RES-CHIP	2.2K	5%	1/10W
R2035	1-208-776-11	METAL CHIP	560	0.50%	1/10W
R2036	1-208-775-11	METAL CHIP	510	0.50%	1/10W
R2037	1-216-051-00	RES-CHIP	1.2K	5%	1/10W
R2038	1-216-033-00	RES-CHIP	220	5%	1/10W
R2039	1-216-047-91	RES-CHIP	820	5%	1/10W
R2040	1-216-057-00	RES-CHIP	2.2K	5%	1/10W
R2041	1-216-047-91	RES-CHIP	820	5%	1/10W
R2042	1-216-075-00	RES-CHIP	12K	5%	1/10W
R2043	1-216-085-00	RES-CHIP	33K	5%	1/10W
R2044	1-216-057-00	RES-CHIP	2.2K	5%	1/10W
R2046	1-216-075-00	RES-CHIP	12K	5%	1/10W
R2047	1-216-085-00	RES-CHIP	33K	5%	1/10W
R2048	1-216-049-11	RES-CHIP	1K	5%	1/10W
R2049	1-216-065-91	RES-CHIP	4.7K	5%	1/10W
R2050	1-216-017-91	RES-CHIP	47	5%	1/10W
R2051	1-216-049-11	RES-CHIP	1K	5%	1/10W
R2052	1-216-049-11	RES-CHIP	1K	5%	1/10W
R2053	1-216-041-00	RES-CHIP	470	5%	1/10W
R2054	1-216-041-00	RES-CHIP	470	5%	1/10W
R2055	1-216-017-91	RES-CHIP	47	5%	1/10W
R2056	1-216-067-00	RES-CHIP	5.6K	5%	1/10W
R2057	1-216-049-11	RES-CHIP	1K	5%	1/10W
R2058	1-216-057-00	RES-CHIP	2.2K	5%	1/10W
R2059	1-216-049-11	RES-CHIP	1K	5%	1/10W
R2060	1-216-025-11	RES-CHIP	100	5%	1/10W
R2061	1-216-043-91	RES-CHIP	560	5%	1/10W
R2062	1-216-105-91	RES-CHIP	220K	5%	1/10W
R2063	1-216-089-11	RES-CHIP	47K	5%	1/10W
R2064	1-216-049-11	RES-CHIP	1K	5%	1/10W
R2065	1-216-049-11	RES-CHIP	1K	5%	1/10W
R2066	1-216-033-00	RES-CHIP	220	5%	1/10W
R2067	1-216-048-00	RES-CHIP	910	5%	1/10W
R2068	1-216-295-11	SHORT			
R2069	1-208-776-11	METAL CHIP	560	0.50%	1/10W
R2070	1-216-646-11	METAL CHIP	620	0.50%	1/10W
R2071	1-216-067-00	RES-CHIP	5.6K	5%	1/10W
R2072	1-216-043-91	RES-CHIP	560	5%	1/10W
R2073	1-216-049-11	RES-CHIP	1K	5%	1/10W
R2074	1-216-025-11	RES-CHIP	100	5%	1/10W
R2076	1-216-049-11	RES-CHIP	1K	5%	1/10W
R2077	1-216-049-11	RES-CHIP	1K	5%	1/10W
R2078	1-216-041-00	RES-CHIP	470	5%	1/10W
R2079	1-216-049-11	RES-CHIP	1K	5%	1/10W
R2092	1-216-055-00	RES-CHIP	1.8K	5%	1/10W
R2093	1-216-055-00	RES-CHIP	1.8K	5%	1/10W
R2103	1-216-017-91	RES-CHIP	47	5%	1/10W
R2104	1-216-295-11	SHORT			
R2105	1-216-295-11	SHORT			
R2106	1-216-295-11	SHORT			
R2107	1-216-295-11	SHORT			
R2113	1-216-017-91	RES-CHIP	47	5%	1/10W
R2115	1-216-049-11	RES-CHIP	1K	5%	1/10W
R2153	1-216-295-11	SHORT			
R2201	1-216-022-00	RES-CHIP	75	5%	1/10W
R2202	1-216-022-00	RES-CHIP	75	5%	1/10W
R2203	1-216-022-00	RES-CHIP	75	5%	1/10W
R2204	1-216-295-11	SHORT			
R3305	1-216-043-91	RES-CHIP	560	5%	1/10W
R3308	1-216-033-00	RES-CHIP	220	5%	1/10W
R3310	1-216-033-00	RES-CHIP	220	5%	1/10W
R3312	1-216-037-00	RES-CHIP	330	5%	1/10W
R3313	1-216-025-11	RES-CHIP	100	5%	1/10W
R3314	1-216-025-11	RES-CHIP	100	5%	1/10W
R3316	1-216-295-11	SHORT			
R3319	1-216-295-11	SHORT			
R3322	1-216-049-11	RES-CHIP	1K	5%	1/10W
R3323	1-216-049-11	RES-CHIP	1K	5%	1/10W
R3324	1-216-049-11	RES-CHIP	1K	5%	1/10W
R3343	1-216-049-11	RES-CHIP	1K	5%	1/10W

Downloaded from www.Manualslib.com manuals search engine

NOTE: The components identified by shading and ⚠ mark are critical for safety. Replace only with part number specified.

NOTE: Les composants identifies par un trame et une marque ⚠ sont critiques pour la securite. Ne les remplacer que par une piece portant le numero specifie.

UX UY

REF.NO.	PART NO.	DESCRIPTION	VALUES		
R3344	1-216-049-11	RES-CHIP	1K	5%	1/10W
R3346	1-216-049-11	RES-CHIP	1K	5%	1/10W
R3347	1-216-061-00	RES-CHIP	3.3K	5%	1/10W
R3348	1-216-057-00	RES-CHIP	2.2K	5%	1/10W
R3350	1-216-295-11	SHORT			
R3355	1-216-295-11	SHORT			
R3357	1-216-295-11	SHORT			
R3358	1-216-033-00	RES-CHIP	220	5%	1/10W
R3359	1-216-047-91	RES-CHIP	820	5%	1/10W
R3360	1-216-053-00	RES-CHIP	1.5K	5%	1/10W
R3361	1-216-045-00	RES-CHIP	680	5%	1/10W
R3379	1-216-043-91	RES-CHIP	560	5%	1/10W
R3380	1-216-033-00	RES-CHIP	220	5%	1/10W

CRYSTAL

⚠ X2001	1-767-606-11	VIBRATOR, CRYSTAL	
⚠ X2002	1-767-367-21	VIBRATOR, CERAMIC	
⚠ X3302	1-781-929-21	VIBRATOR, CRYSTAL	

UY

*	A-1395-031-A	UY COMPLETE PC BOARD (KV-36FS13 ONLY)
*	A-1395-027-A	UY COMPLETE PC BOARD (KV-36FS17/38FS17 ONLY)

CAPACITOR

C201	1-128-551-11	ELECT	22µF	20%	25V
C202	1-128-551-11	ELECT	22µF	20%	25V
C203	1-128-551-11	ELECT	22µF	20%	25V
C204	1-126-960-11	ELECT	1µF	20%	50V
C205	1-126-960-11	ELECT	1µF	20%	50V
C231	1-163-021-91	CERAMIC CHIP	0.01µF	10%	50V
C232	1-126-965-11	ELECT	22µF	20%	50V
C233	1-128-551-11	ELECT	22µF	20%	25V
C234	1-126-960-11	ELECT	1µF	20%	50V
C235	1-126-960-11	ELECT	1µF	20%	50V
C236	1-128-551-11	ELECT	22µF	20%	25V
C237	1-126-960-11	ELECT	1µF	20%	50V
C238	1-126-960-11	ELECT	1µF	20%	50V
C244	1-126-959-11	ELECT	0.47µF	20%	50V
C245	1-126-959-11	ELECT	0.47µF	20%	50V
C264	1-164-004-11	CERAMIC CHIP	0.1µF	10%	25V
C268	1-163-021-91	CERAMIC CHIP	0.01µF	10%	50V
C269	1-163-021-91	CERAMIC CHIP	0.01µF	10%	50V
C272	1-163-231-11	CERAMIC CHIP	15pF	5%	50V
C273	1-128-551-11	ELECT	22µF	20%	25V
C277	1-128-551-11	ELECT	22µF	20%	25V
C278	1-128-551-11	ELECT (KV-36FS17/38FS17 ONLY)	22µF	20%	25V
C279	1-163-021-91	CERAMIC CHIP	0.01µF	10%	50V
C281	1-128-551-11	ELECT	22µF	20%	25V
C282	1-126-941-11	ELECT	470µF	20%	25V
C284	1-126-941-11	ELECT	470µF	20%	25V
C286	1-164-161-11	CERAMIC CHIP	0.0022µF	10%	50V
C287	1-164-161-11	CERAMIC CHIP	0.0022µF	10%	50V
C1053	1-126-934-11	ELECT	220µF	20%	16V
C1201	1-163-809-11	CERAMIC CHIP	0.047µF	10%	25V
C1202	1-163-021-91	CERAMIC CHIP	0.01µF	10%	50V
C1203	1-126-960-11	ELECT	1µF	20%	50V
C1205	1-126-941-11	ELECT	470µF	20%	25V
C1209	1-163-259-91	CERAMIC CHIP	220pF	5%	50V
C1211	1-128-551-11	ELECT	22µF	20%	25V
C1212	1-128-551-11	ELECT	22µF	20%	25V
C1213	1-126-941-11	ELECT	470µF	20%	25V
C1262	1-216-081-00	RES-CHIP	22K	5%	1/10W
C2000	1-126-941-11	ELECT	470µF	20%	25V
C2002	1-128-551-11	ELECT	22µF	20%	25V
C2012	1-163-021-91	CERAMIC CHIP	0.01µF	10%	50V
C2015	1-163-021-91	CERAMIC CHIP	0.01µF	10%	50V
C2045	1-163-237-11	CERAMIC CHIP	27pF	5%	50V
C2047	1-126-961-11	ELECT	2.2µF	20%	50V
C2048	1-126-964-11	ELECT	10µF	20%	50V
C2049	1-104-664-11	ELECT	47µF	20%	16V
C2056	1-163-231-11	CERAMIC CHIP	15pF	5%	50V
C2060	1-163-031-11	CERAMIC CHIP	0.01µF	50V	
C2062	1-104-664-11	ELECT	47µF	20%	16V
C2096	1-163-231-11	CERAMIC CHIP	15pF	5%	50V
C2097	1-163-231-11	CERAMIC CHIP	15pF	5%	50V
C2168	1-163-253-11	CERAMIC CHIP	120pF	5%	50V
C2202	1-128-551-11	ELECT	22µF	20%	25V
C3301	1-104-664-11	ELECT (KV-36FS17/38FS17 ONLY)	47µF	20%	25V
C3302	1-163-031-11	CERAMIC CHIP (KV-36FS17/38FS17 ONLY)	0.01µF		50V
C3303	1-126-961-11	ELECT (KV-36FS17/38FS17 ONLY)	2.2µF	20%	50V
C3304	1-163-038-11	CERAMIC CHIP (KV-36FS17/38FS17 ONLY)	0.1µF		25V
C3305	1-126-961-11	ELECT (KV-36FS17/38FS17 ONLY)	2.2µF	20%	50V
C3306	1-163-038-11	CERAMIC CHIP (KV-36FS17/38FS17 ONLY)	0.1µF		25V
C3307	1-126-964-11	ELECT (KV-36FS17/38FS17 ONLY)	10µF	20%	50V

Downloaded from www.Manualslib.com manuals search engine

UY

REF.NO.	PART NO.	DESCRIPTION	VALUES		
C3308	1-163-038-11	CERAMIC CHIP (KV-36FS17/38FS17 ONLY)	0.1µF		25V
C3309	1-126-964-11	ELECT (KV-36FS17/38FS17 ONLY)	10µF	20%	50V
C3311	1-163-038-11	CERAMIC CHIP (KV-36FS17/38FS17 ONLY)	0.1µF		25V
C3312	1-126-964-11	ELECT (KV-36FS17/38FS17 ONLY)	10µF	20%	50V
C3313	1-163-038-11	CERAMIC CHIP (KV-36FS17/38FS17 ONLY)	0.1µF		25V
C3315	1-216-295-11	SHORT (KV-36FS17/38FS17 ONLY)			
C3316	1-216-295-11	SHORT (KV-36FS17/38FS17 ONLY)			
C3317	1-104-666-11	ELECT (KV-36FS17/38FS17 ONLY)	220µF	20%	25V
C3318	1-164-004-11	CERAMIC CHIP (KV-36FS17/38FS17 ONLY)	0.1µF	10%	25V
C3319	1-163-031-11	CERAMIC CHIP (KV-36FS17/38FS17 ONLY)	0.01µF		50V
C3320	1-104-664-11	ELECT (KV-36FS17/38FS17 ONLY)	47µF	20%	16V
C3321	1-163-237-11	CERAMIC CHIP (KV-36FS17/38FS17 ONLY)	27pF	5%	50V
C3322	1-163-237-11	CERAMIC CHIP (KV-36FS17/38FS17 ONLY)	27pF	5%	50V
C3323	1-163-038-11	CERAMIC CHIP (KV-36FS17/38FS17 ONLY)	0.1µF		25V
C3325	1-104-664-11	ELECT (KV-36FS17/38FS17 ONLY)	47µF	20%	16V
C3327	1-126-941-11	ELECT (KV-36FS17/38FS17 ONLY)	470µF	20%	25V
C3328	1-126-935-11	ELECT (KV-36FS17/38FS17 ONLY)	470µF	20%	10V
C3329	1-104-664-11	ELECT (KV-36FS17/38FS17 ONLY)	47µF	20%	16V
C3349	1-163-123-00	CERAMIC CHIP (KV-36FS17/38FS17 ONLY)	180pF	5%	50V
C3350	1-164-004-11	CERAMIC CHIP (KV-36FS17/38FS17 ONLY)	0.1µF	10%	25V
C3354	1-163-031-11	CERAMIC CHIP (KV-36FS17/38FS17 ONLY)	0.01µF		50V
C3357	1-163-031-11	CERAMIC CHIP (KV-36FS17/38FS17 ONLY)	0.01µF		50V
C3358	1-163-031-11	CERAMIC CHIP (KV-36FS17/38FS17 ONLY)	0.01µF		50V
C3368	1-216-295-11	SHORT (KV-36FS17/38FS17 ONLY)			
C3369	1-163-031-11	CERAMIC CHIP (KV-36FS17/38FS17 ONLY)	0.01µF		50V
C3370	1-163-031-11	CERAMIC CHIP (KV-36FS17/38FS17 ONLY)	0.01µF		50V
C3371	1-163-031-11	CERAMIC CHIP (KV-36FS17/38FS17 ONLY)	0.01µF		50V
C3556	1-163-038-11	CERAMIC CHIP	0.1µF		25V
C3557	1-163-021-91	CERAMIC CHIP	0.01µF	10%	50V
C3558	1-126-964-11	ELECT	10µF	20%	50V
C3559	1-163-038-11	CERAMIC CHIP	0.1µF		25V
C3560	1-163-038-11	CERAMIC CHIP	0.1µF		25V
C3561	1-126-964-11	ELECT	10µF	20%	50V
C3562	1-163-038-11	CERAMIC CHIP	0.1µF		25V
C3563	1-163-038-11	CERAMIC CHIP	0.1µF		25V
C3564	1-163-038-11	CERAMIC CHIP	0.1µF		25V
C3565	1-163-038-11	CERAMIC CHIP	0.1µF		25V
C3566	1-126-964-11	ELECT	10µF	20%	50V
C3567	1-163-021-91	CERAMIC CHIP	0.01µF	10%	50V
C3568	1-163-021-91	CERAMIC CHIP	0.01µF	10%	50V
C3569	1-126-964-11	ELECT	10µF	20%	50V
C3570	1-126-964-11	ELECT	10µF	20%	50V
C3571	1-163-021-91	CERAMIC CHIP	0.01µF	10%	50V
C3573	1-163-037-11	CERAMIC CHIP	0.022µF	10%	50V
C3574	1-163-021-91	CERAMIC CHIP	0.01µF	10%	50V
C3575	1-126-964-11	ELECT	10µF	20%	50V
C3576	1-163-021-91	CERAMIC CHIP	0.01µF	10%	50V
C3577	1-126-964-11	ELECT	10µF	20%	50V
C3578	1-163-021-91	CERAMIC CHIP	0.01µF	10%	50V
C3579	1-104-664-11	ELECT	47µF	20%	16V

CONNECTOR

*	CN261	1-564-510-11	PLUG, CONNECTOR 7P (KV-36FS17/38FS17 ONLY)
*	CN265	1-764-333-11	PLUG, CONNECTOR 10P

DIODE

D201	8-719-032-47	DIODE MTZJ-T-9110
D202	8-719-032-47	DIODE MTZJ-T-9110
D203	8-719-032-47	DIODE MTZJ-T-9110
D204	8-719-032-47	DIODE MTZJ-T-9110
D205	8-719-032-47	DIODE MTZJ-T-9110
D231	8-719-032-47	DIODE MTZJ-T-9110
D232	8-719-032-47	DIODE MTZJ-T-9110
D233	8-719-032-47	DIODE MTZJ-T-9110
D234	8-719-032-47	DIODE MTZJ-T-9110
D235	8-719-032-47	DIODE MTZJ-T-9110
D236	8-719-032-47	DIODE MTZJ-T-9110
D237	8-719-032-47	DIODE MTZJ-T-9110
D238	8-719-032-47	DIODE MTZJ-T-9110
D239	8-719-032-47	DIODE MTZJ-T-9110
D248	8-719-157-94	DIODE RD3.3SB-T1
D261	8-719-032-47	DIODE MTZJ-T-9110
D1051	8-719-073-01	DIODE MA111-TX

Downloaded from www.Manualslib.com manuals search engine

NOTE: The components identified by shading and ⚠ mark are critical for safety. Replace only with part number specified.

NOTE: Les composants identifies par un trame et une marque ⚠ sont critiques pour la securite. Ne les remplacer que par une piece portant le numero specifie.

UY

REF.NO.	PART NO.	DESCRIPTION	VALUES
D1052	8-719-073-01	DIODE MA111-TX	
D1053	1-216-295-11	SHORT	
D1054	1-216-295-11	SHORT	
D2202	8-719-032-47	DIODE MTZJ-T-9110	
	FERRITE		
FB2006	1-414-230-22	FERRITE	0µH
FB2007	1-414-230-22	FERRITE	0µH
FB2008	1-414-230-22	FERRITE	0µH
FB3301	1-216-295-11	SHORT (KV-36FS17/38FS17 ONLY)	
FB3302	1-414-230-22	FERRITE (KV-36FS17/38FS17 ONLY)	0µH
FB3303	1-414-230-22	FERRITE (KV-36FS17/38FS17 ONLY)	0µH
FB3304	1-414-230-22	FERRITE (KV-36FS17/38FS17 ONLY)	0µH
FB3305	1-414-230-22	FERRITE	0µH
	FILTER		
FL2001	1-239-847-11	FILTER, LOW PASS	
FL2002	1-239-847-11	FILTER, LOW PASS	
FL2004	1-239-847-11	FILTER, LOW PASS	
	IC		
IC261	8-752-066-69	IC CXA1845Q	
IC2006	8-759-358-38	IC NJM78M05DLA(TE1)	
IC3302	8-759-358-38	IC NJM78M05DLA(TE1) (KV-36FS17/38FS17 ONLY)	
⚠ IC3303	8-759-830-24	IC SDA9588XB23 (KV-36FS17/38FS17 ONLY)	
IC3308	8-759-932-69	IC BU4053BCF-T2 (KV-36FS17/38FS17 ONLY)	
IC3310	8-759-559-82	IC UPC29M33T-E1 (KV-36FS17/38FS17 ONLY)	
IC3504	8-752-390-37	IC CXD2064Q-T6	
	JACK		
J231	1-750-515-11	TERMINAL BLOCK, S 3P	
J232	1-750-517-11	JACK BLOCK, PIN 3P	
J233	1-750-516-11	JACK BLOCK, PIN 2P	
J236	1-774-358-11	JACK BLOCK, PIN	
	CHIP CONDUCTOR		
JR1001	1-216-295-11	SHORT	
JR1002	1-216-295-11	SHORT	
JR1003	1-216-295-11	SHORT	
JR1004	1-216-295-11	SHORT	
JR1014	1-216-295-11	SHORT	
JR1015	1-216-295-11	SHORT	
JR1016	1-216-295-11	SHORT	
JR1017	1-216-295-11	SHORT	
JR1018	1-216-295-11	SHORT	
JR1019	1-216-295-11	SHORT	
JR1020	1-216-295-11	SHORT	
JR1021	1-216-295-11	SHORT	
JR1022	1-216-295-11	SHORT	
JR1023	1-216-295-11	SHORT	
JR1203	1-216-295-11	SHORT	
	COIL		
L261	1-414-857-11	INDUCTOR	100µH
L1201	1-408-591-11	INDUCTOR	1µH
L1202	1-408-591-11	INDUCTOR	1µH
L2004	1-414-856-11	INDUCTOR	10µH
L2005	1-410-494-11	INDUCTOR	1MH
L2009	1-414-856-11	INDUCTOR	10µH
L3301	1-414-856-11	INDUCTOR (KV-36FS17/38FS17 ONLY)	10µH
L3302	1-410-473-11	INDUCTOR (KV-36FS17/38FS17 ONLY)	18µH
L3303	1-410-476-11	INDUCTOR (KV-36FS17/38FS17 ONLY)	33µH
L3304	1-414-856-11	INDUCTOR (KV-36FS17/38FS17 ONLY)	10µH
L3305	1-414-856-11	INDUCTOR (KV-36FS17/38FS17 ONLY)	10µH
L3306	1-414-856-11	INDUCTOR (KV-36FS17/38FS17 ONLY)	10µH
L3307	1-414-856-11	INDUCTOR (KV-36FS17/38FS17 ONLY)	10µH
L3308	1-414-856-11	INDUCTOR (KV-36FS17/38FS17 ONLY)	10µH
L3581	1-408-591-11	INDUCTOR	1µH
L3582	1-408-591-11	INDUCTOR	1µH
	TRANSISTOR		
Q202	8-729-422-27	TRANSISTOR 2SD601A-QRS-TX (KV-36FS17/38FS17 ONLY)	
Q203	8-729-422-27	TRANSISTOR 2SD601A-QRS-TX (KV-36FS17/38FS17 ONLY)	
Q205	8-729-216-22	TRANSISTOR 2SB709A-QRS-TX (KV-36FS17/38FS17 ONLY)	
Q206	8-729-216-22	TRANSISTOR 2SB709A-QRS-TX (KV-36FS17/38FS17 ONLY)	
Q207	8-729-422-27	TRANSISTOR 2SD601A-QRS-TX (KV-36FS17/38FS17 ONLY)	
Q208	8-729-422-27	TRANSISTOR 2SD601A-QRS-TX (KV-36FS17/38FS17 ONLY)	
Q209	8-729-422-27	TRANSISTOR 2SD601A-QRS-TX (KV-36FS17/38FS17 ONLY)	
Q210	8-729-422-27	TRANSISTOR 2SD601A-QRS-TX	
Q211	8-729-422-27	TRANSISTOR 2SD601A-QRS-TX	
Q212	8-729-422-27	TRANSISTOR 2SD601A-QRS-TX	
Q235	8-729-422-27	TRANSISTOR 2SD601A-QRS-TX	
Q236	8-729-422-27	TRANSISTOR 2SD601A-QRS-TX	

Downloaded from www.Manualslib.com manuals search engine

UY

REF.NO.	PART NO.	DESCRIPTION	VALUES
Q262	8-729-216-22	TRANSISTOR 2SB709A-QRS-TX	
Q263	8-729-216-22	TRANSISTOR 2SB709A-QRS-TX	
Q264	8-729-216-22	TRANSISTOR 2SB709A-QRS-TX	
Q265	8-729-422-27	TRANSISTOR 2SD601A-QRS-TX	
Q1051	8-729-216-22	TRANSISTOR 2SB709A-QRS-TX	
Q1201	8-729-216-22	TRANSISTOR 2SB709A-QRS-TX	
Q1202	8-729-422-27	TRANSISTOR 2SD601A-QRS-TX	
Q1205	8-729-422-27	TRANSISTOR 2SD601A-QRS-TX	
Q1207	8-729-216-22	TRANSISTOR 2SB709A-QRS-TX	
Q2003	8-729-216-22	TRANSISTOR 2SB709A-QRS-TX	
Q2004	8-729-216-22	TRANSISTOR 2SB709A-QRS-TX	
Q2005	8-729-422-27	TRANSISTOR 2SD601A-QRS-TX	
Q2006	8-729-422-27	TRANSISTOR 2SD601A-QRS-TX	
Q2007	8-729-422-27	TRANSISTOR 2SD601A-QRS-TX	
Q2008	8-729-422-27	TRANSISTOR 2SD601A-QRS-TX	
Q2009	8-729-422-27	TRANSISTOR 2SD601A-QRS-TX	
Q2010	8-729-422-27	TRANSISTOR 2SD601A-QRS-TX	
Q2014	8-729-422-27	TRANSISTOR 2SD601A-QRS-TX	
Q2018	8-729-216-22	TRANSISTOR 2SB709A-QRS-TX	
Q2019	8-729-422-27	TRANSISTOR 2SD601A-QRS-TX	
Q3301	8-729-422-27	TRANSISTOR 2SD601A-QRS-TX (KV-36FS17/38FS17 ONLY)	
Q3306	8-729-216-22	TRANSISTOR 2SB709A-QRS-TX (KV-36FS17/38FS17 ONLY)	
Q3307	8-729-216-22	TRANSISTOR 2SB709A-QRS-TX (KV-36FS17/38FS17 ONLY)	
Q3312	8-729-216-22	TRANSISTOR 2SB709A-QRS-TX (KV-36FS17/38FS17 ONLY)	
Q3315	8-729-216-22	TRANSISTOR 2SB709A-QRS-TX (KV-36FS17/38FS17 ONLY)	
Q3316	8-729-216-22	TRANSISTOR 2SB709A-QRS-TX (KV-36FS17/38FS17 ONLY)	
Q3317	8-729-422-27	TRANSISTOR 2SD601A-QRS-TX	

RESISTOR

R201	1-216-022-00	RES-CHIP	75	5%	1/10W
R202	1-216-022-00	RES-CHIP	75	5%	1/10W
R203	1-216-022-00	RES-CHIP	75	5%	1/10W
R204	1-216-113-00	RES-CHIP	470K	5%	1/10W
R205	1-216-113-00	RES-CHIP	470K	5%	1/10W
R206	1-216-295-11	SHORT			
R207	1-216-295-11	SHORT			
R208	1-216-295-11	SHORT			
R209	1-216-089-11	RES-CHIP	47K	5%	1/10W
R210	1-216-081-00	RES-CHIP	22K	5%	1/10W
R211	1-216-089-11	RES-CHIP	47K	5%	1/10W
R212	1-216-081-00	RES-CHIP	22K	5%	1/10W
R213	1-216-089-11	RES-CHIP	47K	5%	1/10W
R214	1-216-081-00	RES-CHIP	22K	5%	1/10W
R216	1-216-025-11	RES-CHIP (KV-36FS17/38FS17 ONLY)	100	5%	1/10W
R218	1-208-774-11	METAL CHIP (KV-36FS17/38FS17ONLY)	470	0.50%	1/10W
R219	1-216-049-11	RES-CHIP (KV-36FS17/38FS17 ONLY)	1K	5%	1/10W
R220	1-216-025-11	RES-CHIP (KV-36FS17/38FS17 ONLY)	100	5%	1/10W
R221	1-208-774-11	METAL CHIP (KV-36FS17/38FS17 ONLY)	470	0.50%	1/10W
R222	1-216-049-11	RES-CHIP (KV-36FS17/38FS17 ONLY)	1K	5%	1/10W
R223	1-208-758-11	METAL CHIP (KV-36FS17/38FS17 ONLY)	100	0.50%	1/10W
R225	1-216-025-11	RES-CHIP (KV-36FS17/38FS17 ONLY)	100	5%	1/10W
R226	1-216-025-11	RES-CHIP (KV-36FS17/38FS17 ONLY)	100	5%	1/10W
R227	1-216-041-00	RES-CHIP (KV-36FS17/38FS17 ONLY)	470	5%	1/10W
R228	1-216-049-11	RES-CHIP (KV-36FS17/38FS17 ONLY)	1K	5%	1/10W
R229	1-216-049-11	RES-CHIP (KV-36FS17/38FS17 ONLY)	1K	5%	1/10W
R231	1-216-022-00	RES-CHIP	75	5%	1/10W
R232	1-216-022-00	RES-CHIP	75	5%	1/10W
R233	1-216-065-91	RES-CHIP	4.7K	5%	1/10W
R234	1-216-022-00	RES-CHIP	75	5%	1/10W
R235	1-216-113-00	RES-CHIP	470K	5%	1/10W
R236	1-216-113-00	RES-CHIP	470K	5%	1/10W
R237	1-216-022-00	RES-CHIP	75	5%	1/10W
R238	1-216-113-00	RES-CHIP	470K	5%	1/10W
R239	1-216-113-00	RES-CHIP	470K	5%	1/10W
R241	1-216-113-00	RES-CHIP	470K	5%	1/10W
R242	1-216-049-11	RES-CHIP	1K	5%	1/10W
R243	1-216-113-00	RES-CHIP	470K	5%	1/10W
R244	1-216-049-11	RES-CHIP	1K	5%	1/10W
R257	1-216-049-11	RES-CHIP	1K	5%	1/10W
R258	1-216-057-00	RES-CHIP	2.2K	5%	1/10W
R259	1-216-049-11	RES-CHIP	1K	5%	1/10W
R260	1-216-057-00	RES-CHIP	2.2K	5%	1/10W
R261	1-216-025-11	RES-CHIP	100	5%	1/10W
R262	1-216-067-00	RES-CHIP	5.6K	5%	1/10W
R263	1-216-025-11	RES-CHIP	100	5%	1/10W
R264	1-216-067-00	RES-CHIP	5.6K	5%	1/10W
R265	1-216-025-11	RES-CHIP	100	5%	1/10W
R266	1-216-025-11	RES-CHIP	100	5%	1/10W
R267	1-216-025-11	RES-CHIP	100	5%	1/10W
R268	1-216-067-00	RES-CHIP	5.6K	5%	1/10W
R269	1-216-067-00	RES-CHIP	5.6K	5%	1/10W

Downloaded from www.Manualslib.com manuals search engine

UY

REF.NO.	PART NO.	DESCRIPTION	VALUES		
R270	1-216-049-11	RES-CHIP	1K	5%	1/10W
R271	1-216-067-00	RES-CHIP	5.6K	5%	1/10W
R272	1-216-025-11	RES-CHIP	100	5%	1/10W
R273	1-216-067-00	RES-CHIP	5.6K	5%	1/10W
R274	1-216-049-11	RES-CHIP	1K	5%	1/10W
R275	1-216-025-11	RES-CHIP	100	5%	1/10W
R276	1-216-295-11	SHORT			
R278	1-216-067-00	RES-CHIP	5.6K	5%	1/10W
R280	1-216-067-00	RES-CHIP	5.6K	5%	1/10W
R282	1-216-025-11	RES-CHIP	100	5%	1/10W
R283	1-216-049-11	RES-CHIP	1K	5%	1/10W
R284	1-216-033-00	RES-CHIP	220	5%	1/10W
R285	1-216-033-00	RES-CHIP	220	5%	1/10W
R286	1-216-067-00	RES-CHIP	5.6K	5%	1/10W
R287	1-216-025-11	RES-CHIP	100	5%	1/10W
R288	1-216-067-00	RES-CHIP	5.6K	5%	1/10W
R289	1-216-067-00	RES-CHIP	5.6K	5%	1/10W
R290	1-216-025-11	RES-CHIP (KV-36FS17/38FS17 ONLY)	100	5%	1/10W
R291	1-216-067-00	RES-CHIP	5.6K	5%	1/10W
R292	1-216-295-11	SHORT			
R293	1-216-025-11	RES-CHIP	100	5%	1/10W
R294	1-216-077-91	RES-CHIP	15K	5%	1/10W
R295	1-216-025-11	RES-CHIP	100	5%	1/10W
R296	1-216-025-11	RES-CHIP	100	5%	1/10W
R297	1-216-025-11	RES-CHIP	100	5%	1/10W
R298	1-216-295-11	SHORT			
R300	1-216-025-11	RES-CHIP	100	5%	1/10W
R301	1-216-049-11	RES-CHIP	1K	5%	1/10W
R302	1-216-295-11	SHORT			
R1062	1-216-033-00	RES-CHIP	220	5%	1/10W
R1063	1-216-073-00	RES-CHIP	10K	5%	1/10W
R1205	1-216-295-11	SHORT			
R1207	1-208-774-11	METAL CHIP	470	0.50%	1/10W
R1209	1-216-295-11	SHORT			
R1210	1-216-295-11	SHORT			
R1215	1-208-774-11	METAL CHIP	470	0.50%	1/10W
R1216	1-216-057-00	RES-CHIP	2.2K	5%	1/10W
R1217	1-216-091-00	RES-CHIP	56K	5%	1/10W
R1219	1-216-073-00	RES-CHIP	10K	5%	1/10W
R1220	1-216-013-00	RES-CHIP	33	5%	1/10W
R1221	1-216-121-11	RES-CHIP	1M	5%	1/10W
R1222	1-216-073-00	RES-CHIP	10K	5%	1/10W
R1223	1-216-097-11	RES-CHIP	100K	5%	1/10W
R1224	1-216-089-11	RES-CHIP	47K	5%	1/10W
R1225	1-216-097-11	RES-CHIP	100K	5%	1/10W
R1226	1-216-295-11	SHORT			
R1231	1-216-295-11	SHORT			

REF.NO.	PART NO.	DESCRIPTION	VALUES		
R1239	1-208-774-11	METAL CHIP	470	0.50%	1/10W
R1261	1-216-025-11	RES-CHIP	100	5%	1/10W
R1263	1-216-295-11	SHORT			
R1264	1-216-049-11	RES-CHIP	1K	5%	1/10W
R1265	1-216-001-00	RES-CHIP	10	5%	1/10W
R1266	1-216-041-00	RES-CHIP (KV-36FS17/38FS17 ONLY)	470	5%	1/10W
R1267	1-216-025-11	RES-CHIP	100	5%	1/10W
R1268	1-216-049-11	RES-CHIP	1K	5%	1/10W
R1269	1-216-041-00	RES-CHIP (KV-36FS17/38FS17 ONLY)	470	5%	1/10W
R1270	1-216-049-11	RES-CHIP	1K	5%	1/10W
R1271	1-216-001-00	RES-CHIP	10	5%	1/10W
R1272	1-216-655-11	METAL CHIP	1.5K	0.50%	1/10W
R1273	1-208-788-11	METAL CHIP	1.8K	0.50%	1/10W
R1275	1-216-065-91	RES-CHIP	4.7K	5%	1/10W
R1276	1-216-049-11	RES-CHIP	1K	5%	1/10W
R1277	1-216-025-11	RES-CHIP (KV-36FS17/38FS17 ONLY)	100	5%	1/10W
R1279	1-216-025-11	RES-CHIP	100	5%	1/10W
R1281	1-216-295-11	SHORT			
R1284	1-216-295-11	SHORT			
R1285	1-216-041-00	RES-CHIP (KV-36FS17/38FS17 ONLY)	470	5%	1/10W
R1287	1-216-295-11	SHORT			
R1288	1-216-295-11	SHORT			
R1289	1-216-295-11	SHORT			
R1290	1-216-295-11	SHORT			
R1291	1-216-295-11	SHORT			
R1292	1-216-295-11	SHORT			
R1304	1-216-041-00	RES-CHIP	470	5%	1/10W
R1305	1-208-776-11	METAL CHIP	560	0.50%	1/10W
R1306	1-216-025-11	RES-CHIP	100	5%	1/10W
R2015	1-216-081-00	RES-CHIP	22K	5%	1/10W
R2016	1-216-081-00	RES-CHIP	22K	5%	1/10W
R2017	1-216-295-11	SHORT			
R2018	1-216-295-11	SHORT			
R2021	1-216-081-00	RES-CHIP	22K	5%	1/10W
R2027	1-216-049-11	RES-CHIP	1K	5%	1/10W
R2028	1-216-049-11	RES-CHIP	1K	5%	1/10W
R2029	1-216-043-91	RES-CHIP	560	5%	1/10W
R2030	1-216-043-91	RES-CHIP	560	5%	1/10W
R2031	1-216-081-00	RES-CHIP	22K	5%	1/10W
R2032	1-216-067-00	RES-CHIP	5.6K	5%	1/10W
R2033	1-208-790-11	METAL CHIP	2.2K	0.50%	1/10W
R2034	1-216-057-00	RES-CHIP	2.2K	5%	1/10W
R2035	1-216-049-11	RES-CHIP	1K	5%	1/10W
R2036	1-216-051-00	RES-CHIP	1.2K	5%	1/10W

Downloaded from www.Manualslib.com manuals search engine

UY

REF.NO.	PART NO.	DESCRIPTION	VALUES		
R2037	1-208-784-11	METAL CHIP	1.2K	0.50%	1/10W
R2038	1-208-762-11	METAL CHIP	150	0.50%	1/10W
R2039	1-216-047-91	RES-CHIP	820	5%	1/10W
R2040	1-216-057-00	RES-CHIP	2.2K	5%	1/10W
R2041	1-216-047-91	RES-CHIP	820	5%	1/10W
R2042	1-216-075-00	RES-CHIP	12K	5%	1/10W
R2043	1-216-085-00	RES-CHIP	33K	5%	1/10W
R2044	1-208-790-11	METAL CHIP	2.2K	0.50%	1/10W
R2046	1-216-075-00	RES-CHIP	12K	5%	1/10W
R2047	1-216-085-00	RES-CHIP	33K	5%	1/10W
R2048	1-216-049-11	RES-CHIP	1K	5%	1/10W
R2050	1-216-017-91	RES-CHIP	47	5%	1/10W
R2051	1-216-049-11	RES-CHIP	1K	5%	1/10W
R2055	1-216-017-91	RES-CHIP	47	5%	1/10W
R2057	1-216-049-11	RES-CHIP	1K	5%	1/10W
R2060	1-216-025-11	RES-CHIP	100	5%	1/10W
R2069	1-208-774-11	METAL CHIP	470	0.50%	1/10W
R2070	1-216-615-91	METAL CHIP	33	0.50%	1/10W
R2071	1-216-067-00	RES-CHIP	5.6K	5%	1/10W
R2072	1-216-043-91	RES-CHIP	560	5%	1/10W
R2073	1-216-049-11	RES-CHIP	1K	5%	1/10W
R2074	1-216-025-11	RES-CHIP	100	5%	1/10W
R2081	1-216-075-00	RES-CHIP	12K	5%	1/10W
R2202	1-216-022-00	RES-CHIP	75	5%	1/10W
R2204	1-216-295-11	SHORT (KV-36FS17/38FS17 ONLY)			
R3305	1-216-043-91	RES-CHIP (KV-36FS17/38FS17 ONLY)	560	5%	1/10W
R3308	1-216-033-00	RES-CHIP (KV-36FS17/38FS17 ONLY)	220	5%	1/10W
R3309	1-216-041-00	RES-CHIP (KV-36FS17/38FS17 ONLY)	470	5%	1/10W
R3310	1-216-033-00	RES-CHIP (KV-36FS17/38FS17 ONLY)	220	5%	1/10W
R3312	1-216-037-00	RES-CHIP (KV-36FS17/38FS17 ONLY)	330	5%	1/10W
R3313	1-216-025-11	RES-CHIP (KV-36FS17/38FS17 ONLY)	100	5%	1/10W
R3314	1-216-025-11	RES-CHIP (KV-36FS17/38FS17 ONLY)	100	5%	1/10W
R3316	1-216-295-11	SHORT (KV-36FS17/38FS17 ONLY)			
R3319	1-216-295-11	SHORT (KV-36FS17/38FS17 ONLY)			
R3322	1-216-049-11	RES-CHIP (KV-36FS17/38FS17 ONLY)	1K	5%	1/10W
R3323	1-216-049-11	RES-CHIP (KV-36FS17/38FS17 ONLY)	1K	5%	1/10W
R3324	1-216-049-11	RES-CHIP (KV-36FS17/38FS17 ONLY)	1K	5%	1/10W
R3343	1-216-049-11	RES-CHIP (KV-36FS17/38FS17 ONLY)	1K	5%	1/10W
R3344	1-216-049-11	RES-CHIP (KV-36FS17/38FS17 ONLY)	1K	5%	1/10W
R3346	1-216-049-11	RES-CHIP (KV-36FS17/38FS17 ONLY)	1K	5%	1/10W
R3347	1-216-061-00	RES-CHIP (KV-36FS17/38FS17 ONLY)	3.3K	5%	1/10W
R3348	1-216-057-00	RES-CHIP (KV-36FS17/38FS17 ONLY)	2.2K	5%	1/10W
R3350	1-216-295-11	SHORT (KV-36FS17/38FS17 ONLY)			
R3355	1-216-295-11	SHORT (KV-36FS17/38FS17 ONLY)			
R3357	1-216-295-11	SHORT (KV-36FS17/38FS17 ONLY)			
R3358	1-216-033-00	RES-CHIP (KV-36FS17/38FS17 ONLY)	220	5%	1/10W
R3359	1-216-047-91	RES-CHIP (KV-36FS17/38FS17 ONLY)	820	5%	1/10W
R3360	1-216-053-00	RES-CHIP (KV-36FS17/38FS17 ONLY)	1.5K	5%	1/10W
R3361	1-216-045-00	RES-CHIP (KV-36FS17/38FS17 ONLY)	680	5%	1/10W
R3379	1-216-043-91	RES-CHIP (KV-36FS17/38FS17 ONLY)	560	5%	1/10W
R3381	1-216-033-00	RES-CHIP (KV-36FS17/38FS17 ONLY)	220	5%	1/10W
R3511	1-216-295-11	SHORT			
R3527	1-216-033-00	RES-CHIP	220	5%	1/10W
R3582	1-216-033-00	RES-CHIP	220	5%	1/10W
R3583	1-216-061-00	RES-CHIP	3.3K	5%	1/10W
R3584	1-216-057-00	RES-CHIP	2.2K	5%	1/10W
R3585	1-216-061-00	RES-CHIP	3.3K	5%	1/10W
R3586	1-216-295-11	SHORT			
R3590	1-216-295-11	SHORT			
R3591	1-216-295-11	SHORT			
R3592	1-216-091-00	RES-CHIP	56K	5%	1/10W
R3593	1-216-043-91	RES-CHIP	560	5%	1/10W
R3594	1-216-295-11	SHORT			
R3595	1-216-295-11	SHORT			
R3599	1-216-295-11	SHORT			

CRYSTAL

⚠	X3302	1-781-929-21	VIBRATOR, CRYSTAL(KV-36FS17/38FS17 ONLY)

Downloaded from www.Manualslib.com manuals search engine

NOTE: The components identified by shading and ⚠ mark are critical for safety. Replace only with part number specified.

NOTE: Les composants identifies par un trame et une marque ⚠ sont critiques pour la securite. Ne les remplacer que par une piece portant le numero specifie.

WA

WA

REF.NO.	PART NO.	DESCRIPTION	VALUES		
*	A-1375-220-A	WA COMPLETE PC BOARD (KV-32FV27 ONLY)			
*	A-1375-221-A	WA COMPLETE PC BOARD (KV-36FS13/36FS17/36FV27/38FS17 ONLY)			
	4-382-854-11	SCREW (M3X10), P, SW (+)			
		CAPACITOR			
C941	1-126-942-61	ELECT	1000µF	20%	25V
C944	1-126-964-11	ELECT	10µF	20%	50V
C946	1-104-665-11	ELECT	100µF	20%	25V
C947	1-104-664-11	ELECT	47µF	20%	25V
C949	1-161-830-00	CERAMIC	0.0047µF		500V
C950	1-126-941-11	ELECT	470µF	20%	25V
C951	1-107-645-11	ELECT	22µF	20%	160V
C952	1-104-999-11	MYLAR	0.1µF	10%	200V
C953	1-106-383-00	MYLAR	0.047µF	10%	200V
C954	1-115-202-91	MYLAR	0.001µF	5%	63V
C955	1-107-667-11	ELECT	2.2µF	20%	160V
C956	1-115-202-91	MYLAR	0.001µF	5%	63V
C957	1-106-383-00	MYLAR	0.047µF	10%	200V
C958	1-126-941-11	ELECT	470µF	20%	25V
C960	1-163-021-91	CERAMIC CHIP	0.01µF	10%	50V
C961	1-164-004-11	CERAMIC CHIP	0.1µF	10%	25V
C962	1-126-964-11	ELECT	10µF	20%	50V
C963	1-126-963-11	ELECT	4.7µF	20%	50V
C964	1-110-501-11	CERAMIC CHIP	0.33µF	10%	16V
C965	1-104-664-11	ELECT	47µF	20%	25V
C966	1-126-960-11	ELECT	1µF	20%	50V
C967	1-126-964-11	ELECT	10µF	20%	50V
C968	1-163-021-91	CERAMIC CHIP	0.01µF	10%	50V
C970	1-163-021-91	CERAMIC CHIP	0.01µF	10%	50V
C971	1-104-664-11	ELECT	47µF	20%	25V
C972	1-163-251-11	CERAMIC CHIP	100pF	5%	50V
C973	1-163-021-91	CERAMIC CHIP	0.01µF	10%	50V
C974	1-137-509-11	MYLAR	0.01µF	5%	63V
C976	1-130-967-00	FILM	0.0027µF	5%	50V
C977	1-104-760-11	CERAMIC CHIP	0.047µF	10%	50V
C1941	1-126-941-11	ELECT	470µF	20%	25V
C1946	1-136-165-00	FILM	0.1µF	5%	50V
C1947	1-136-165-00	FILM	0.1µF	5%	50V
C1948	1-164-161-11	CERAMIC CHIP	0.0022µF	10%	50V
C1961	1-129-725-00	FILM	0.082µF	5%	400V
C1962	1-163-021-91	CERAMIC CHIP	0.01µF	10%	50V
C1965	1-136-601-11	FILM (KV-32FV27 ONLY)	0.01µF	5%	630V
C1965	1-129-718-00	FILM (ALL EXCEPT KV-32FV27)	0.022µF	5%	630V
C1966	1-137-378-11	MYLAR	0.22µF	5%	50V
C1968	1-137-378-11	MYLAR	0.22µF	5%	50V
C1972	1-104-664-11	ELECT	47µF	20%	25V
C1974	1-104-664-11	ELECT	47µF	20%	25V
		CONNECTOR			
* CN941	1-564-511-11	PLUG, CONNECTOR 8P			
* CN942	1-564-508-11	PLUG, CONNECTOR 5P			
* CN961	1-770-723-11	CONNECTOR, BOARD TO BOARD 8P			
* CN981	1-564-506-11	PLUG, CONNECTOR 3P			
		DIODE			
D941	8-719-991-33	DIODE 1SS133T-77			
D943	8-719-991-33	DIODE 1SS133T-77			
D944	8-719-991-33	DIODE 1SS133T-77			
D945	8-719-109-89	DIODE MTZJ-T-77-5.6C			
D946	8-719-110-88	DIODE MTZJ-T-77-39			
D947	8-719-110-88	DIODE MTZJ-T-77-39			
D950	8-719-991-33	DIODE 1SS133T-77			
D951	8-719-991-33	DIODE 1SS133T-77			
D962	8-719-991-33	DIODE 1SS133T-77			
D963	8-719-073-01	DIODE MA111-TX			
D964	8-719-210-21	DIODE ERA82-004TP5			
D966	8-719-075-41	DIODE PR1004GT			
D1961	8-719-991-33	DIODE 1SS133T-77			
D1962	8-719-991-33	DIODE 1SS133T-77			
		FERRITE BEAD			
FB901	1-410-397-21	FERRITE	1.1µH		
FB902	1-410-397-21	FERRITE	1.1µH		
		IC			
IC961	8-759-803-42	IC LA6500-FA			
IC962	8-759-659-67	IC NJM2903D			
IC963	8-759-659-67	IC NJM2903D			
IC964	8-759-700-42	IC NJM2904D			
IC965	8-759-701-59	IC NJM78M09FA			
		COIL			
L961	1-459-104-00	COIL, WITH CORE			
L964	1-406-989-21	INDUCTOR	10MH		
		TRANSISTOR			
Q941	8-729-422-27	TRANSISTOR 2SD601A-QRS-TX			
Q942	8-729-216-22	TRANSISTOR 2SB709A-QRS-TX			
Q943	8-729-422-27	TRANSISTOR 2SD601A-QRS-TX			
Q944	8-729-422-27	TRANSISTOR 2SD601A-QRS-TX			
Q945	8-729-422-27	TRANSISTOR 2SD601A-QRS-TX			

Downloaded from www.Manualslib.com manuals search engine

WA

REF.NO.	PART NO.	DESCRIPTION	VALUES		
Q946	8-729-045-05	TRANSISTOR 2SA2005			
Q947	8-729-045-04	TRANSISTOR 2SC5511			
Q948	8-719-914-43	DIODE DAN202K-T-146			
Q949	8-729-216-22	TRANSISTOR 2SB709A-QRS-TX			
Q961	8-729-422-27	TRANSISTOR 2SD601A-QRS-TX			
Q962	8-729-119-76	TRANSISTOR 2SA1309A-QRSTA			
Q963	8-729-119-76	TRANSISTOR 2SA1309A-QRSTA			
Q965	8-729-931-45	TRANSISTOR IRF614			
Q966	8-729-216-22	TRANSISTOR 2SB709A-QRS-TX			
Q967	8-729-140-97	TRANSISTOR 2SB734-T-34			
Q968	8-729-422-27	TRANSISTOR 2SD601A-QRS-TX			
Q969	8-729-422-27	TRANSISTOR 2SD601A-QRS-TX			
Q1961	8-729-140-97	TRANSISTOR 2SB734-T-34			
Q1963	8-729-216-22	TRANSISTOR 2SB709A-QRS-TX			
Q1964	8-729-216-22	TRANSISTOR 2SB709A-QRS-TX			
Q1966	8-729-422-27	TRANSISTOR 2SD601A-QRS-TX			
Q1967	8-729-216-22	TRANSISTOR 2SB709A-QRS-TX			
	RESISTOR				
R941	1-249-420-11	CARBON	1.8K	5%	1/4W
R943	1-216-033-00	RES-CHIP	220	5%	1/10W
R944	1-216-049-11	RES-CHIP	1K	5%	1/10W
R945	1-216-049-11	RES-CHIP	1K	5%	1/10W
R946	1-215-888-00	METAL OXIDE	220	5%	2W
R947	1-216-025-11	RES-CHIP	100	5%	1/10W
R949	1-216-057-00	RES-CHIP	2.2K	5%	1/10W
R950	1-216-049-11	RES-CHIP	1K	5%	1/10W
R951	1-216-049-11	RES-CHIP	1K	5%	1/10W
R952	1-216-041-00	RES-CHIP	470	5%	1/10W
R953	1-216-021-00	RES-CHIP	68	5%	1/10W
R954	1-216-033-00	RES-CHIP	220	5%	1/10W
R955	1-216-047-91	RES-CHIP	820	5%	1/10W
R956	1-216-025-11	RES-CHIP	100	5%	1/10W
R957	1-216-073-00	RES-CHIP	10K	5%	1/10W
R958	1-216-025-11	RES-CHIP	100	5%	1/10W
R959	1-216-021-00	RES-CHIP	68	5%	1/10W
R960	1-216-065-91	RES-CHIP	4.7K	5%	1/10W
R961	1-216-091-00	RES-CHIP	56K	5%	1/10W
R962	1-216-077-91	RES-CHIP	15K	5%	1/10W
R963	1-216-065-91	RES-CHIP	4.7K	5%	1/10W
R964	1-216-073-00	RES-CHIP	10K	5%	1/10W
R965	1-216-077-91	RES-CHIP	15K	5%	1/10W
R966	1-216-073-00	RES-CHIP	10K	5%	1/10W
R967	1-216-071-00	RES-CHIP	8.2K	5%	1/10W
R968	1-216-061-00	RES-CHIP (KV-32FV27 ONLY)	3.3K	5%	1/10W
R968	1-208-802-11	METAL CHIP (ALL EXCEPT KV-32FV27 ONLY)	6.8K	0.50%	1/10W
R969	1-216-025-11	RES-CHIP	100	5%	1/10W

REF.NO.	PART NO.	DESCRIPTION	VALUES		
R970	1-208-822-11	METAL CHIP (KV-32FV27 ONLY)	47K	0.50%	1/10W
R970	1-208-820-11	METAL CHIP (ALL EXCEPT KV-32FV27 ONLY)	39K	0.50%	1/10W
R971	1-216-049-11	RES-CHIP	1K	5%	1/10W
R972	1-216-065-91	RES-CHIP	4.7K	5%	1/10W
R973	1-216-057-00	RES-CHIP	2.2K	5%	1/10W
R974	1-208-808-11	METAL CHIP	12K	0.50%	1/10W
R975	1-216-073-00	RES-CHIP	10K	5%	1/10W
R976	1-216-057-00	RES-CHIP	2.2K	5%	1/10W
R977	1-249-401-11	CARBON	47	5%	1/4W
R978	1-216-073-00	RES-CHIP	10K	5%	1/10W
R979	1-216-033-00	RES-CHIP	220	5%	1/10W
R980	1-216-073-00	RES-CHIP	10K	5%	1/10W
R981	1-216-081-00	RES-CHIP	22K	5%	1/10W
R982	1-216-051-00	RES-CHIP	1.2K	5%	1/10W
R983	1-249-381-11	CARBON	1	5%	1/4W
R984	1-249-383-11	CARBON	1.5	5%	1/4W
R985	1-215-421-00	METAL	1K	1%	1/4W
R986	1-216-057-00	RES-CHIP	2.2K	5%	1/10W
R988	1-215-429-00	METAL	2.2K	1%	1/4W
R990	1-216-025-11	RES-CHIP	100	5%	1/10W
R991	1-208-800-11	METAL CHIP	5.6K	0.50%	1/10W
R992	1-208-794-11	METAL CHIP	3.3K	0.50%	1/10W
R993	1-216-049-11	RES-CHIP	1K	5%	1/10W
R994	1-216-025-11	RES-CHIP	100	5%	1/10W
R995	1-216-051-00	RES-CHIP	1.2K	5%	1/10W
R1941	1-260-312-11	CARBON	47	5%	1/2W
R1942	1-249-387-11	CARBON	3.3	5%	1/4W
R1943	1-249-414-11	CARBON	560	5%	1/4W
R1944	1-249-432-11	CARBON	18K	5%	1/4W
R1945	1-215-914-11	METAL OXIDE	330	5%	3W
R1946	1-249-417-11	CARBON	1K	5%	1/4W
R1947	1-249-432-11	CARBON	18K	5%	1/4W
R1948	1-249-414-11	CARBON	560	5%	1/4W
R1949	1-249-387-11	CARBON	3.3	5%	1/4W
R1950	1-249-401-11	CARBON	47	5%	1/4W
R1951	1-216-097-11	RES-CHIP	100K	5%	1/10W
R1952	1-216-097-11	RES-CHIP	100K	5%	1/10W
R1953	1-216-085-00	RES-CHIP	33K	5%	1/10W
R1954	1-216-089-11	RES-CHIP (KV-32FV27 ONLY)	47K	5%	1/10W
R1954	1-208-822-11	METAL CHIP (ALL EXCEPT KV-32FV27)	47K	0.50%	1/10W
R1955	1-208-808-11	METAL CHIP	12K	0.50%	1/10W
R1956	1-216-057-00	RES-CHIP	2.2K	5%	1/10W
R1957	1-216-295-91	SHORT			
R1958	1-216-061-00	RES-CHIP	3.3K	5%	1/10W

Downloaded from www.Manualslib.com manuals search engine

WA

REF.NO.	PART NO.	DESCRIPTION	VALUES		
R1959	1-216-073-00	RES-CHIP	10K	5%	1/10W
R1960	1-216-037-00	RES-CHIP	330	5%	1/10W
R1961	1-208-824-11	METAL CHIP (KV-32FV27 ONLY)	56K	0.50%	1/10W
R1961	1-208-820-11	METAL CHIP (ALL EXCEPT KV-32FV27)	39K	0.50%	1/10W
R1962	1-208-806-11	METAL CHIP	10K	0.50%	1/10W
⚠ R1963	1-216-033-00	RES-CHIP	220	5%	1/10W
R1964	1-216-057-00	RES-CHIP	2.2K	5%	1/10W
R1967	1-215-489-00	METAL	680K	1%	1/4W
R1969	1-216-073-00	RES-CHIP	10K	5%	1/10W
R1970	1-216-065-91	RES-CHIP	4.7K	5%	1/10W
R1971	1-216-121-11	RES-CHIP	1M	5%	1/10W
R1972	1-216-073-00	RES-CHIP	10K	5%	1/10W
R1973	1-216-035-00	RES-CHIP	270	5%	1/10W
R1975	1-208-798-11	METAL CHIP (KV-32FV27 ONLY)	4.7K	0.50%	1/10W
R1975	1-216-069-00	RES-CHIP (ALL EXCEPT KV-32FV27)	6.8K	5%	1/10W
R1976	1-216-061-00	RES-CHIP (KV-32FV27 ONLY)	3.3K	5%	1/10W
R1976	1-208-794-11	METAL CHIP (ALL EXCEPT KV-32FV27)	3.3K	0.50%	1/10W
R1978	1-216-025-11	RES-CHIP	100	5%	1/10W
R1980	1-216-041-00	RES-CHIP	470	5%	1/10W
R1981	1-216-081-00	RES-CHIP	22K	5%	1/10W
R1982	1-216-081-00	RES-CHIP	22K	5%	1/10W
R1983	1-216-073-00	RES-CHIP	10K	5%	1/10W
R1984	1-216-089-11	RES-CHIP	47K	5%	1/10W
R1987	1-216-097-11	RES-CHIP (KV-32FV27 ONLY)	100K	5%	1/10W
R1987	1-208-818-11	METAL CHIP (ALL EXCEPT KV-32FV27)	33K	0.50%	1/10W
R1989	1-208-818-11	METAL CHIP	33K	0.50%	1/10W
R1990	1-216-089-11	RES-CHIP	47K	5%	1/10W
R1991	1-216-081-00	RES-CHIP	22K	5%	1/10W
R1992	1-216-057-00	RES-CHIP	2.2K	5%	1/10W
R2962	1-215-885-00	METAL OXIDE	68	5%	2W
R2963	1-215-885-00	METAL OXIDE (KV-32FV27 ONLY)	68	5%	2W
R2965	1-216-065-91	RES-CHIP	4.7K	5%	1/10W
R2968	1-216-065-91	RES-CHIP (KV-32FV27 ONLY)	4.7K	5%	1/10W
R2968	1-208-794-11	METAL CHIP (ALL EXCEPT KV-32FV27)	3.3K	0.50%	1/10W
R2969	1-216-065-91	RES-CHIP	4.7K	5%	1/10W
R2971	1-216-089-11	RES-CHIP (KV-32FV27 ONLY)	47K	5%	1/10W

REF.NO.	PART NO.	DESCRIPTION	VALUES		
R2971	1-208-826-11	METAL CHIP (ALL EXCEPT KV-32FV27)	68K	0.50%	1/10W
R2972	1-216-113-00	RES-CHIP	470K	5%	1/10W
R2973	1-216-025-11	RES-CHIP	100	5%	1/10W
R2975	1-216-061-00	RES-CHIP	3.3K	5%	1/10W
R2976	1-216-025-11	RES-CHIP	100	5%	1/10W
R2979	1-216-097-11	RES-CHIP	100K	5%	1/10W
R2980	1-216-097-11	RES-CHIP	100K	5%	1/10W

VARIABLE RESISTOR

RV941	1-238-019-11	RES, ADJ, CARBON	47K

ACCESSORIES AND PACKAGING

*	4-041-259-01	BAG, PROTECTION (KV-32FV27 ONLY)
*	4-066-646-02	BAG, PROTECTION (ALL EXCEPT KV-32FV27)
*	4-082-303-01	CARTON, HSC (KV-36FV27 ONLY)
	4-075-691-03	CARTON, INDIVIDUAL (KV-36FS13/36FS17/38FS17)
*	4-069-471-12	CARTON, INDIVIDUAL (KV-32FV27 ONLY)
*	4-068-786-12	CUSHION, UPPER (KV-32FV27 ONLY)
*	4-068-789-11	CUSHION, LOWER (KV-32FV27 ONLY)
*	4-081-768-01	CUSHION, LOWER (KV-36FV27 ONLY)
*	4-075-047-02	CUSHION,ASSY LOWER (KV-36FS13/36FS17/38FS17)
	4-075-048-01	CUSHION,ASSY UPPER (KV-36FS13/36FS17/38FS17)
	8-953-742-90	HEADPHONE MDR-IF0230//K SET (KV-32FV27/36FV27 ONLY)
*	4-396-077-01	JOINT (KV-36FV27 ONLY)
	4-081-775-22	MANUAL, INSTRUCTION (English) (KV-32FV27/36FV27/36FV27H ONLY)
	4-081-775-31	MANUAL, INSTRUCTION (French) (KV-32FV27CND/36FV27CND ONLY)
	4-081-776-22	MANUAL, INSTRUCTION (English) (KV-36FS13/36FS13H/36FS17 ONLY)
	4-081-776-31	MANUAL, INSTRUCTION (French) (KV-36FS13CND ONLY)
	4-081-776-41	MANUAL, INSTRUCTION (Spanish) (KV-38FS17 ONLY)

REMOTE COMMANDER

1-476-680-11	REMOTE COMMANDER (RM-Y180) (KV-36FS13 ONLY)
1-476-681-11	REMOTE COMMANDER (RM-Y181) (KV-36FS17/38FS17 ONLY)
1-476-668-11	REMOTE COMMANDER (RM-Y182) (KV-32FV27/36FV27 ONLY)
4-978-977-11	BATTERY COVER (FOR RM-Y180, RM-Y181, RM-Y182)

Sony Corporation
Sony Technology Center
Technical Services

English

9-965-901-01

Downloaded from www.Manualslib.com manuals search engine

SONY

4-081-776-21

FD Trinitron

WEGA™

Operating Instructions

KV-36FS13 KV-36FS17

Downloaded from www.Manualslib.com manuals search engine

WARNING

To reduce the risk of fire or shock hazard, do not expose the TV to rain or moisture.

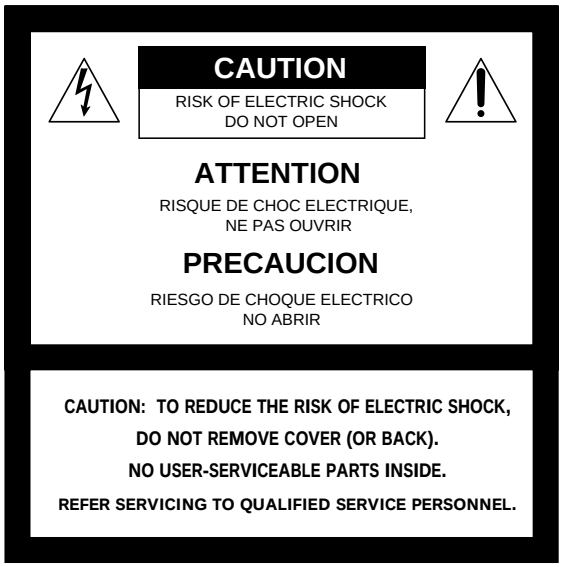

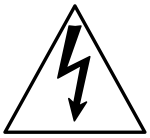

This symbol is intended to alert the user to the presence of uninsulated "dangerous voltage" within the product's enclosure that may be of sufficient magnitude to constitute a risk of electric shock to persons.

This symbol is intended to alert the user to the presence of important operating and maintenance (servicing) instructions in the literature accompanying the appliance.

CAUTION

TO PREVENT ELECTRIC SHOCK, MATCH WIDE BLADE OF PLUG TO WIDE SLOT, FULLY INSERT.

CAUTION

When using TV games, computers, and similar products with your TV, keep the brightness and contrast functions at low settings. If a fixed (non-moving) pattern is left on the screen for long periods of time at a high brightness or contrast setting, the image can be permanently imprinted onto the screen. Continuously watching the same program can cause the imprint of station logos onto the TV screen. These types of imprints are not covered by your warranty because they are the result of misuse.

Note on Caption Vision

This television receiver provides display of television closed captioning in accordance with §15.119 of the FCC rules.

Note on Cleaning the TV

Clean the TV with a soft dry cloth. Never use strong solvents such as thinner or benzine, which might damage the finish of the cabinet.

Note to CATV System Installer

This reminder is provided to call the CATV system installer's attention to Article 820-40 of the NEC that provides guidelines for proper grounding and, in particular, specifies that the cable ground shall be connected to the grounding system of the building, as close to the point of cable entry as practical.

Use of this television receiver for other than private viewing of programs broadcast on UHF or VHF or transmitted by cable companies for the use of the general public may require authorization from the broadcaster / cable company and / or program owner.

NOTIFICATION

This equipment has been tested and found to comply with the limits for a Class B digital device pursuant to Part 15 of the FCC Rules. These limits are designed to provide reasonable protection against harmful interference in a residential installation. This equipment generates, uses, and can radiate radio frequency energy and, if not installed and used in accordance with the instructions, may cause harmful interference with radio communications. However, there is no guarantee that interference will not occur in a particular installation. If this equipment does cause harmful interference to radio or television reception, which can be determined by turning the equipment off and on, the user is encouraged to try to correct the interference by one or more of the following measures:

- ❑ Reorient or relocate the receiving antennas.
- ❑ Increase the separation between the equipment and receiver.
- ❑ Connect the equipment into an outlet on a circuit different from that to which the receiver is connected.
- ❑ Consult the dealer or an experienced radio / TV technician for help.

  You are cautioned that any changes or modifications not expressly approved in this manual could void your authority to operate this equipment.

Safety

- ❑ Operate the TV only on 120 V AC.
- ❑ The plug is designed, for safety purposes, to fit into the wall outlet only one way. If you are unable to insert the plug fully into the outlet, contact your dealer.
- ❑ If any liquid or solid object should fall inside the cabinet, unplug the TV immediately and have it checked by qualified service personnel before operating it further.

Installing

- ❑ To prevent internal heat buildup, do not block the ventilation openings.
- ❑ Do not install the TV in a hot or humid place, or in a place subject to excessive dust or mechanical vibration.
- ❑ The AC power cord is attached to the rear of the TV with hooks. Do not attempt to remove the cord from these hooks. Doing so could cause damage to the TV

As an ENERGY STAR® Partner, Sony has determined that this product or product models meets the ENERGY STAR® guidelines for energy efficiency.

ENERGY STAR® is a U.S. registered mark.

Owner's Record

The model and serial numbers are provided on the front of this instruction manual and at the rear of the TV. Refer to them whenever you call upon your Sony dealer regarding this product.

About this Manual

This manual is for models KV-36FS13 and KV-36FS17. The menu and illustrations shown are for model KV-36FS17 to show the maximum features available. Differences in operation will be indicated in the text, for example, "For KV-36FS13 only."

Downloaded from www.Manualslib.com manuals search engine

Important Safeguards

For your protection, please read these instructions completely, and keep this manual for future reference.

Carefully observe and comply with all warnings, cautions and instructions placed on the set or described in the operating instructions or service manual.

WARNING

To guard against injury, the following basic safety precautions should be observed in the installation, use and servicing of the set.

Use

Power Sources

This set should be operated only from the type of power source indicated on the serial / model plate. If you are not sure of the type of electrical power supplied to your home, consult your dealer or local power company. For those sets designed to operate from battery power, refer to the operating instructions.

Grounding or Polarization

This set is equipped with a polarized AC power cord plug (a plug having one blade wider than the other), or with a three-wire grounding type plug (a plug having a third pin for grounding).Follow the instructions below:

For the set with a polarized AC power cord plug

This plug will fit into the power outlet only one way. This is a safety feature. If you are unable to insert the plug fully into the outlet, try reversing the plug. If the plug still fails to fit, contact your electrician to have a suitable outlet installed. Do not defeat the safety purpose of the polarized plug by forcing it in.

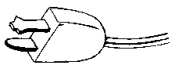

Alternate Warning

For the set with a three-wire grounding type AC plug

This plug will only fit into a grounding-type power outlet. This is a safety feature. If you are unable to insert the plug into the outlet, contact your electrician to have a suitable outlet installed. Do not defeat the safety purpose of the grounding plug.

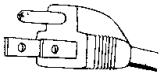

Overloading

Do not overload wall outlets, extension cords or convenience receptacles beyond their capacity, since this can result in fire or electric shock.

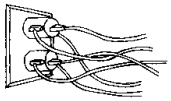

Always turn the set off when it is not being used. When the set is left unattended and unused for long periods of time, unplug it from the wall outlet as a precaution against the possibility of an internal malfunction that could create a fire hazard.

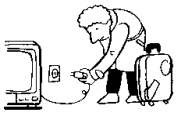

If a snapping or popping sound from a TV set is continuous or frequent while the TV is operating, unplug the TV and consult your dealer or service technician. It is normal for some TV sets to make occasional snapping or popping sounds, particularly when being turned on or off.

Object and Liquid Entry

Never push objects of any kind into the set through the cabinet slots as they may touch dangerous voltage points or short out parts that could result in a fire or electric shock. Never spill liquid of any kind on the set.

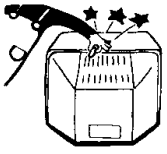

Cleaning

Unplug the set from the wall outlet before cleaning or polishing it. Do not use liquid cleaners or aerosol cleaners. Use a cloth lightly dampened with water for cleaning the exterior of the set.

Installation

Attachments

Do not use attachments not recommended by the manufacturer, as they may cause hazards.

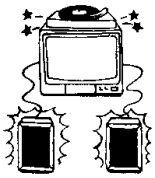

Water and Moisture

Do not use power-line operated sets near water — for example, near a bathtub, washbowl, kitchen sink, or laundry tub, in a wet basement, or near a swimming pool, etc.

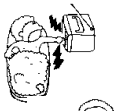

Accessories

Do not place the set on an unstable cart, stand, table or shelf. The set may fall, causing serious injury to a child or an adult and serious damage to the set. Use only a cart or stand recommended by the manufacturer for the specific model of TV. An appliance and cart combination should be moved with care. Quick stops, excessive force, and uneven surfaces may cause the appliance and cart combination to overturn.

Ventilation

The slots and openings in the cabinet and in the back or bottom are provided for necessary ventilation. To ensure reliable operation of the set, and to protect it from overheating, these slots and openings must never be blocked or covered.

- ❑ Never cover the slots and openings with a cloth or other materials.

- ❑ Never block the slots and openings by placing the set on a bed, sofa, rug or other similar surface.

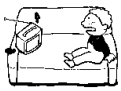

- ❑ Never place the set in a confined space, such as a bookcase or built-in cabinet, unless proper ventilation is provided.

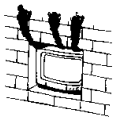

- ❑ Do not place the set near or over a radiator or heat register, or where it is exposed to direct sunlight.

Downloaded from www.Manualslib.com manuals search engine

Power-Cord Protection

Do not allow anything to rest on or roll over the power cord, and do not place the set where the power cord is subject to wear or abuse.

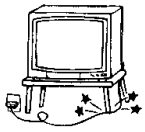

Antennas

Outdoor Antenna Grounding

If an outdoor antenna is installed, follow the precautions below. An outdoor antenna system should not be located in the vicinity of overhead power lines or other electric light or power circuits, or where it can come in contact with such power lines or circuits.

WHEN INSTALLING AN OUTDOOR ANTENNA SYSTEM, EXTREME CARE SHOULD BE TAKEN TO KEEP FROM CONTACTING SUCH POWER LINES OR CIRCUITS AS CONTACT WITH THEM IS ALMOST INVARIABLY FATAL.

Be sure the antenna system is grounded so as to provide some protection against voltage surges and built-up static charges. Section 810 of the National Electrical Code (NEC) in USA and Section 54 of the Canadian Electrical Code in Canada provides information with respect to proper grounding of the mast and supporting structure, grounding of the lead-in wire to an antenna discharge unit, size of grounding conductors, location of antenna discharge unit, connection to grounding electrodes, and requirements for the grounding electrode.

Antenna Grounding According to the NEC

Refer to section 54-300 of Canadian Electrical Code for Antenna Grounding.

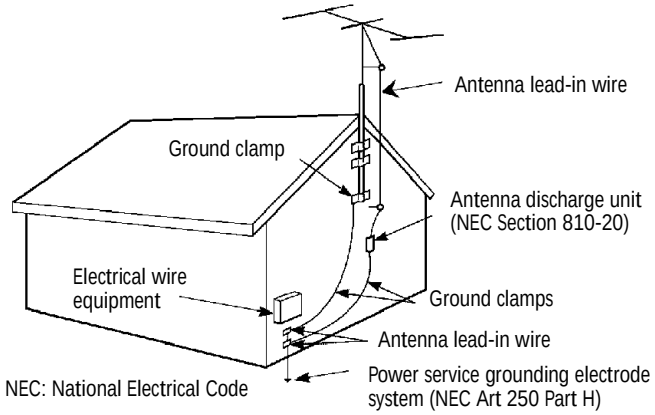

Lightning

For added protection for this television receiver during a lightning storm, or when it is left unattended and unused for long periods of time, unplug it from the wall outlet and disconnect the antenna. This will prevent damage to the receiver due to lightning and power-line surges.

Service

Damage Requiring Service

Unplug the set from the wall outlet and refer servicing to qualified service personnel under the following conditions:

- ❑ When the power cord or plug is damaged or frayed.

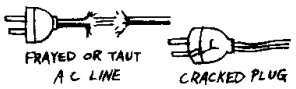

- ❑ If liquid has been spilled into the set.

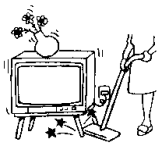

- ❑ If the set has been exposed to rain or water.

- ❑ If the set has been subject to excessive shock by being dropped, or the cabinet has been damaged.

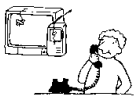

- ❑ If the set does not operate normally when following the operating instructions. Adjust only those controls that are specified in the operating instructions. Improper adjustment of other controls may result in damage and will often require extensive work by a qualified technician to restore the set to normal operation.

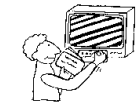

- ❑ When the set exhibits a distinct change in performance, it indicates a need for service.

Servicing

Do not attempt to service the set yourself since opening the cabinet may expose you to dangerous voltage or other hazards. Refer all servicing to qualified service personnel.

Replacement Parts

When replacement parts are required, be sure the service technician certifies in writing that he has used replacement parts specified by the manufacturer that have the same characteristics as the original parts.

Unauthorized substitutions may result in fire, electric shock or other hazards.

Safety Check

Upon completion of any service or repairs to the set, ask the service technician to perform routine safety checks (as specified by the manufacturer) to determine that the set is in safe operating condition, and to so certify. When the set reaches the end of its useful life, improper disposal could result in a picture tube implosion. Ask a qualified service technician to dispose of the set.

Downloaded from www.Manualslib.com manuals search engine

Contents

Introducing the FD Trinitron Wega

Overview 1
Presenting the FD Trinitron Wega 2
Package Contents 3
Using the Remote Control 3

Installing the TV

Overview 9
TV Controls and Connectors 10
Basic Connections (Connecting a Cable or Antenna) 12
Connecting a VCR and Cable 16
Connecting a VCR and Cable Box (KV-36FS17 only) 17
Connecting Two VCRs for Tape Editing 20
Connecting a Satellite Receiver 21
Connecting a Satellite Receiver with a VCR 22
Connecting an Audio Receiver 24
Connecting a DVD Player with Component Video Connectors 25
Connecting a DVD Player with A/V Connectors 26
Connecting a Camcorder 27
Setting Up the TV Automatically 28

Using the Features

Overview 29
Using Favorite Channels 30
Using Picture in Picture (PIP) (KV-36FS17 only) 31

Using the Menus

Overview 35
Using the Video Menu 36
Using the Audio Menu 38
Using the Channel Menu 40
Using the Parent Menu 42
Using the Timer Menu 45
Using the Setup Menu 46
Using the Basic Menu 48

Other Information

Overview 49
Programming the Remote Control 50
Operating Other Components with Your TV Remote Control 52
Troubleshooting 54
Specifications 56
Index 59

Downloaded from www.Manualslib.com manuals search engine

Introducing the FD Trinitron Wega

Overview

This chapter defines the contents of your Wega TV and provides an overview of how to set up and use basic features.

Topic	Page
Presenting the FD Trinitron Wega	2
Package Contents	3
Using the Remote Control	3

Downloaded from www.Manualslib.com manuals search engine

Presenting the FD Trinitron Wega

The FD Trinitron Wega (pronounced VAY-GAH) is characterized by outstanding contrast, uncompromising accuracy, and corner-to-corner detail.

You will recognize the superiority of Wega technology almost immediately. The first thing you will probably notice is minimal glare from the flat picture tube. This flat-screen technology improves picture detail without distortion, unlike conventional curved screens. The FD Trinitron delivers outstanding image detail not only at the screen center, but also at the corners — so you can enjoy a bright, clear picture from any location in a room.

Features

Some of the features that you will enjoy with your new TV include:

- **16:9 Enhancement:** Vertical Compression technology that maximizes picture resolution on “anamorphic” or “enhanced for widescreen” sources, including selected DVDs.
- **Velocity Modulation:** Vertical line enhancement that sharpens picture definition.
- **Parental Control:** V-Chip technology allows parents to block unsuitable programming for younger viewers.
- **Component Video Input:** Offers the best video quality for DVD player connections.
- **S-VIDEO Input:** Provides a high-quality image for connected equipment.

Also, on the KV-36FS17 model:

- **Dual Tuner Picture in Picture (PIP):** Allows you to watch two programs at once.
- **Favorite Channel Preview:** Preview up to eight favorite channels without leaving the current channel.

Downloaded from www.Manualslib.com manuals search engine

Package Contents

Along with your new Trinitron TV, the packing box contains a remote control and two AA batteries. These items are all you need to set it up and operate the TV in its basic configuration.

Most peripherals come with the necessary cables to connect them. If you want to set up special configurations, you may need to buy extra cables or connectors. It is best to ensure that you have all needed materials on hand before beginning a special-connection project.

Using the Remote Control

The remote control is the primary mechanism for controlling your TV. Handle the remote control with care. avoid dropping it, getting it wet, placing it in direct sunlight, near a heater, or where the humidity is high.

Inserting Batteries

Insert two size AA (R6) batteries (supplied) by matching the + and – on the batteries to the diagram inside the battery compartment.

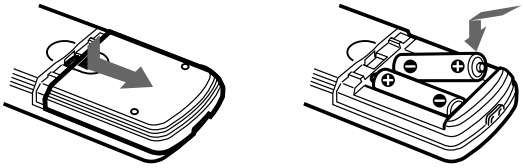

✍ Remove the batteries to avoid damage from possible battery leakage whenever you anticipate that the remote control will not be used for an extended period.

Downloaded from www.Manualslib.com manuals search engine

Button Descriptions

The POWER button on the remote control (no. 11 in the illustration below) activates both the remote control and the TV.

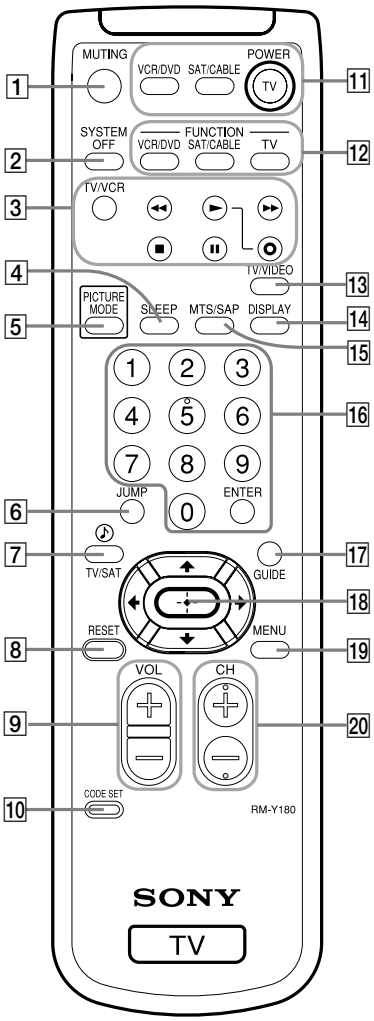

RM-Y180

Model	Remote
KV-36FS13	RM-Y180
KV-36FS17	RM-Y181
(See page 6)	

Button	Description
1 MUTING	Mutes the sound. Press again or press VOL + to restore the sound.
2 SYSTEM OFF	Powers off all Sony equipment at once. (This feature may not work with older Sony equipment.)
3 TV/VCR	Switch between TV and VCR mode. If you have a non-Sony VCR, you will need to program the remote control to recognize your VCR. For details, see “Programming the Remote Control” on page 50
◄◄	Rewind
►►	Fast-forward
►	Play
■	Stop
❚❚	Pause (Press again to resume playback or recording)
RECORD	To record, press ► and ○ simultaneously.
4 SLEEP	Press repeatedly until the TV displays the time in minutes (15, 30, 45, 60, or 90) that you want the TV to remain on before shutting off automatically. Cancel by pressing until SLEEP OFF appears.
5 PICTURE MODE	Cycles through the available video picture modes: Vivid, Standard, Movie, Sports. Also available in the Video menu. For details, see “Selecting Video Options” on page 36.
6 JUMP	Press to jump back and forth between two channels. The TV alternates between the current channel and the last channel that was selected.
7 TV/SAT	Switches between the TV and SAT (satellite) inputs when in SAT FUNCTION mode.
♪	Provides quick access for changing available audio settings. For details, see “Selecting Audio Options” on page 38.
8 RESET	Press when in a menu to reset the settings to the factory defaults.
9 VOL +/-	Adjusts the volume.
10 CODE SET	Used for programming the remote control to operate non-Sony video equipment. For details, see “Programming the Remote Control” on page 50.
11 POWER buttons (GREEN)	Turn on and off the TV and other audio / video equipment.

Downloaded from www.Manualslib.com manuals search engine

Button	Description
12 FUNCTION buttons (WHITE)	Select the equipment (TV, VCR / DVD, SAT / CABLE) that you want to operate. The indicator lights up momentarily when pressed to show which device the remote control is operating.
13 TV/VIDEO	Cycles through the video equipment connected to your TV's video inputs.
14 DISPLAY	Press once to display the current time and channel label (if set) and channel number. Press again to turn Display off. For details on setting the time, see "To set the Current Time" on page 45.
15 MTS/SAP	Cycles through the Multi-channel TV Sound (MTS) options: Stereo, Auto-SAP (Second Audio Program), and Mono. For details, see "Using the Audio Menu" on page 38.
16 0 - 9 and ENTER	Press 0 - 9 to select a channel, the channel changes after 2 seconds. Press ENTER to select immediately.
17 GUIDE	Displays the program guide of your satellite antenna.
18 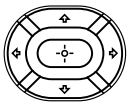	Arrows and Select. Pressing down on the center button selects the item.
19 MENU	Press to display the TV menu. Press again to exit from the menus.
20 CH +/-	Scan through channels.

Downloaded from www.Manualslib.com manuals search engine

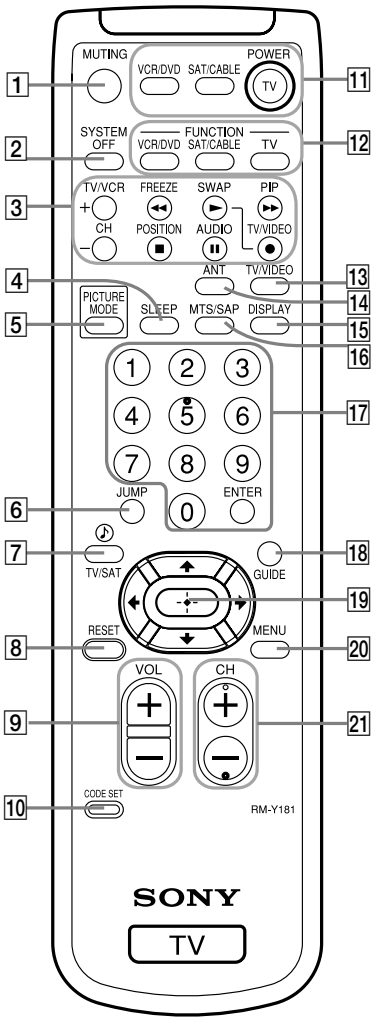

RM-Y181

The POWER button on the remote control (no. 11 in the illustration below) activates both the remote control and the TV.

Button	Description
1 MUTING	Mutes the sound. Press again or press VOL + to restore the sound.
2 SYSTEM OFF	Powers off all Sony equipment at once. (This feature may not work with older Sony equipment.)
3 TV/VCR CONTROLS and PIP CONTROLS	
AUDIO	Alternates sound between the main picture and the window picture.
CH+/-	Changes the channel in the window picture.
FREEZE	Freezes the window picture. Press again to restore the picture.
PIP	Turns on / off PIP. For details, see “Using Picture in Picture (PIP)” on page 31.
POSITION	Moves the location of the window picture.
SWAP	Switches the position of the main picture with the window picture.
TV/VCR	Changes the VHF / UHF output of the VCR.
TV/VIDEO	In the window picture, cycles through the video equipment connected to your TV’s video inputs: TV, VIDEO 1, VIDEO 2, VIDEO 3, VIDEO 4.
4 SLEEP	Press repeatedly until the TV displays the time in minutes (15, 30, 45, 60, or 90) that you want the TV to remain on before shutting off automatically. Cancel by pressing until SLEEP OFF appears.
5 PICTURE MODE	Cycles through the available video picture modes: Vivid, Standard, Movie, Sports. Also available in the Video menu. For details, see “Selecting Video Options” on page 36.
6 JUMP	Press to jump back and forth between two channels. The TV alternates between the current channel and the last channel that was selected.
7 TV/SAT	Switches between the TV and SAT (satellite) inputs when in SAT FUNCTION mode.
♪	Provides quick access for changing available audio settings. For details, see “Selecting Audio Options” on page 38.
8 RESET	Press when in a menu to reset the settings to the factory defaults.
9 VOL +/-	Adjusts the volume.
10 CODE SET	Used for programming the remote control to operate non-Sony video equipment. For details, see “Programming the Remote Control” on page 50.

Downloaded from www.Manualslib.com manuals search engine

Button	Description
11 POWER buttons (GREEN)	Turn on and off the TV and other audio / video equipment.
12 FUNCTION buttons (WHITE)	Select the equipment (TV, VCR / DVD, SAT / CABLE) that you want to operate. The indicator lights up momentarily when pressed to show which device the remote control is operating.
13 TV/VIDEO	Cycles through the video equipment connected to your TV's video inputs.
14 ANT	Changes the VHF / UHF input to the AUX input.
15 DISPLAY	Press once to display the current time and channel label (if set) and channel number. Press again to turn Display off. For details on setting the time, see "To set the Current Time" on page 45.
16 MTS/SAP	Cycles through the Multi-channel TV Sound (MTS) options: Stereo, Auto-SAP (Second Audio Program), and Mono. For details, see "Using the Audio Menu" on page 38.
17 0 - 9 and ENTER	Press 0 - 9 to select a channel, the channel changes after 2 seconds. Press ENTER to select immediately.
18 GUIDE	Displays the program guide of your satellite antenna.
19 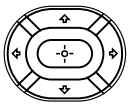	Arrows and Select. Pressing down on the center button selects the item.
20 MENU	Press to display the TV menu. Press again to exit from the menus.
21 CH+/-	Changes the channel in the main picture.

Downloaded from www.Manualslib.com manuals search engine

Installing the TV

Overview

This chapter includes illustrated instructions for setting up your TV.

Topic	Page
TV Controls and Connectors	10
Basic Connections (Connecting a Cable or Antenna)	12
Connecting a VCR and Cable	16
Connecting a VCR and Cable Box (KV-36FS17 only)	17
Connecting Two VCRs for Tape Editing	20
Connecting a Satellite Receiver	21
Connecting a Satellite Receiver with a VCR	22
Connecting an Audio Receiver	24
Connecting a DVD Player with Component Video Connectors	25
Connecting a DVD Player with A/V Connectors	26
Connecting a Camcorder	27
Setting Up the TV Automatically	28

Note About the AC Power Cord

The AC power cord is attached to the rear of the TV with hooks. Use caution when removing the AC plug from its holder. Gently slide the cord in the upward direction without removing the cord from the two lower hooks.

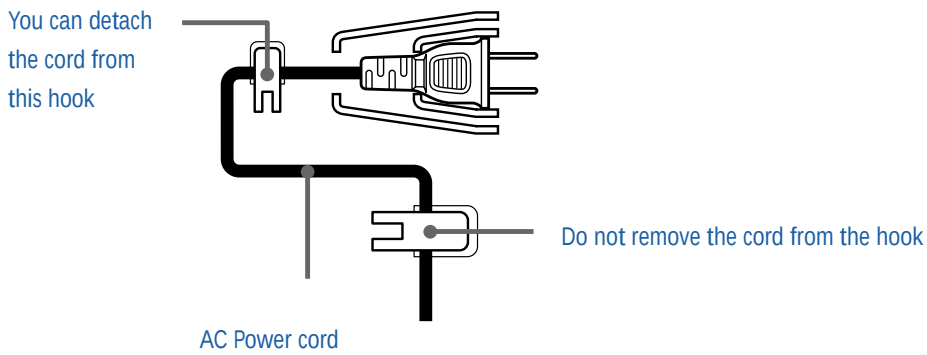

Downloaded from www.Manualslib.com manuals search engine

TV Controls and Connectors

Front Panel Menu Controls

The front panel menu controls allow access to the on-screen menus without the use of a remote control. Pressing the MENU button brings up the on-screen menus. The arrow buttons (↑↓) move the on-screen cursor in the menus and the (⊹) button selects the menu item.

TV Rear Panel

Model KV-36FS13

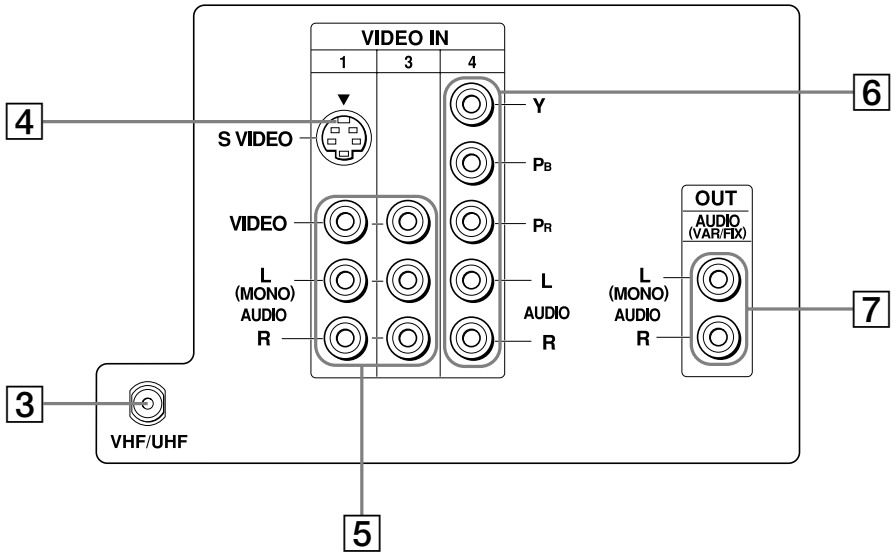

Model KV-36FS17

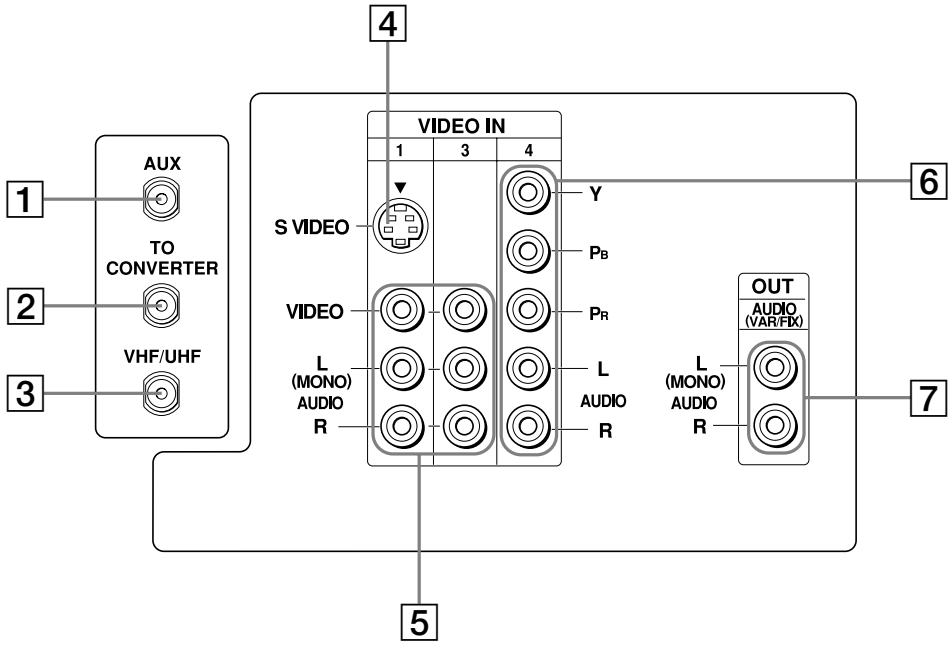

Downloaded from www.Manualslib.com manuals search engine

Back Panel Descriptions

Connection	Description
1 AUX (KV-36FS17)	Allows you to view local and cable channels if your cable provider does not feature local channels. You can switch between local and cable channels easily by pressing ANT on the remote control. Devices connected to the AUX input cannot be viewed in PIP.
2 TO CONVERTER (KV-36FS17)	This is a VHF / UHF out jack that lets you set up your TV to switch between scrambled channels (through a cable box) and normal cable channels (CATV). Use this jack instead of a splitter to get better picture quality when needing to switch between scrambled and unscrambled cable channels.
3 VHF/UHF	Connects to your VHF / UHF antenna or cable.
4 S VIDEO	Connects to the S VIDEO OUT jack of your VCR or other S VIDEO-equipped video component. Provides better picture quality than the VHF / UHF jacks or the Video IN jack.
5 AUDIO (L/R)/ VIDEO	Connects to the audio and video OUT jacks on your VCR or other video component. A third video input (VIDEO 2) is located on the front panel of the TV. The Audio and Video IN jacks provide better picture quality than the VHF / UHF jack.
6 Y, PB, PR, L, R	Connects to your DVD player's or Digital Set-top box's component video (Y, PB, PR) and audio (L / R) jacks.
7 AUDIO OUT (VAR/FIX) L (MONO)/R	Connects to the left and right audio inputs of your audio or video component. You can use these outputs to listen to your TV's audio through your stereo system.

Downloaded from www.Manualslib.com manuals search engine

Basic Connections (Connecting a Cable or Antenna)

Connecting Directly to Cable or an Antenna

The connection you choose depends on the cable found in your home.

Newer homes usually have standard coaxial cable:

VHF Only or VHF/UHF or Cable

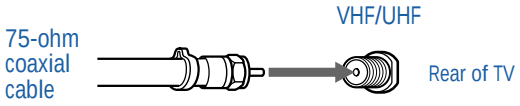

Older homes may have 300-ohm, twin-lead cable:

VHF Only or UHF Only or VHF/UHF

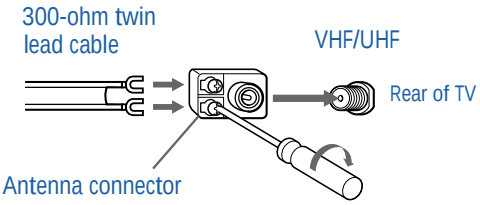

Other homes may have both:

VHF and UHF

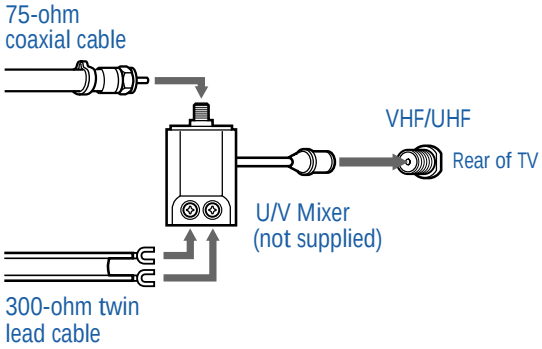

Downloaded from www.Manualslib.com manuals search engine

Cable and Antenna (KV-36FS17 only)

If your cable provider does not feature local channels, you may find this set-up convenient.

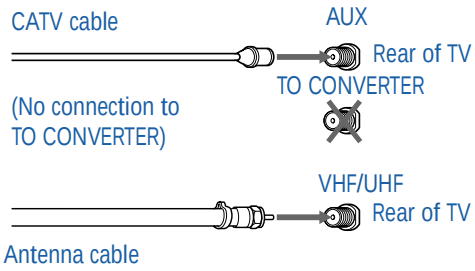

To receive channels using an antenna, instead of using the CATV cable

1. Select antenna mode by pressing the ANT button on the remote control. (This is a toggle: pressing the button once selects antenna mode; pressing the button again selects cable mode.)
2. Turn the Cable to OFF (see page 42).
3. Perform the Auto Program function (see page 42).

Basic Cable Box Connections

Cable Box and Cable

This is the preferred basic cable TV hookup to use if your cable TV company scrambles some channels, but not all of them (pay channels vs. regular cable channels), and you need to use a cable box.

With this setup you can:

- Use the TV remote control to change channels on your cable box when the signal is scrambled.
- Use the TV remote control to change channels using your TV when the signal is not scrambled. (Your TV's tuner provides a better signal than the cable box.)
- Use the PIP feature normally with the CATV input.
- Use the PIP feature partially with the cable box. (When you switch the TV input to AUX — to use the cable box — the scrambled picture will display only in the main window. If you turn on the PIP, you will be able to see any of the regular channels in the PIP window, but you cannot SWAP the pictures between the main and PIP windows.)

(Continued on the next page)

Downloaded from www.Manualslib.com manuals search engine

(Continued from the previous page)

1. Connect the Cable TV cable to the TV's VHF/UHF jack.
2. Using a coaxial cable, connect the TV's TO CONVERTER jack to the cable box's IN jack. The TV's internal converter allows you to switch between unscrambled signals coming straight into the TV and scrambled signals coming in through the cable box, eliminating the need for an external splitter.
3. Using a coaxial cable, connect the cable box's OUT jack to the TV's AUX jack.

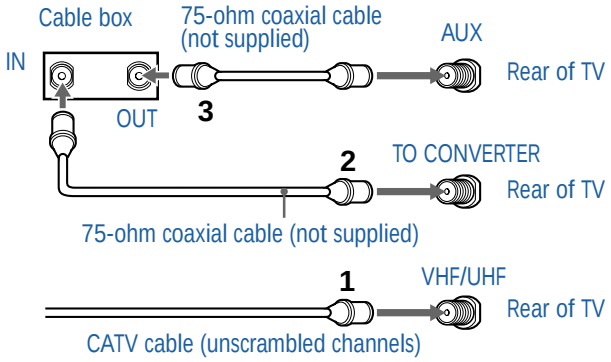

To switch between channels from cable box and channels from regular cable

- Press the ANT button on the TV remote control. (This is a toggle: pressing the button once selects the cable box; pressing the button again selects regular cable.)

To use the cable box

- Have your TV tuner set to channel 3 or 4 (as appropriate) and then use the cable box to switch channels.

To use the TV remote control to switch channels on the cable box

- Program the remote control as necessary. (See "Programming the Remote Control" on page 50.) Then use the remote control to switch cable box channels.

To prevent the accidental switching of TV channels

- When using the cable box, you need your TV to stay on a required channel (usually channel 3 or 4). You can use the TV's Channel Fix feature to lock in a specific channel. The Channel Fix feature is under the Channel menu. For details, see "Using the Channel Menu" on page 40.

Downloaded from www.Manualslib.com manuals search engine

Cable Box only

Use this hookup if:

- ❑ You subscribe to a cable TV system that scrambles or encodes all signals, requiring a cable box to view all channels, and
- ❑ You do not intend to hook up any other audio or video equipment to your TV.

When all channels are routed through your cable box, only one unscrambled signal is sent to the TV, so you cannot use the PIP feature. If some of your channels are scrambled, but others are not, consider using the hookup “Cable Box and Cable” on page 13 instead.

1. Connect the coaxial connector from your cable service to the cable box’s IN jack.
2. Using a coaxial cable, connect the cable box’s OUT jack to the TV’s VHF / UHF jack.

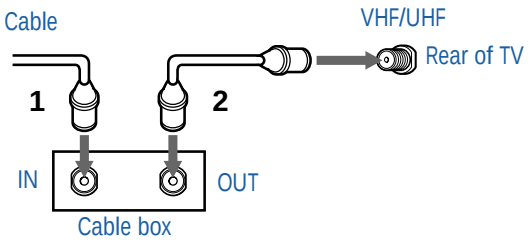

Downloaded from www.Manualslib.com manuals search engine

Connecting a VCR and Cable

Use this hookup if you subscribe to a cable TV (CATV) system that does not require a cable box.

1. Connect the CATV cable to the VCR's IN jack.
2. Using a coaxial cable, connect the VCR's OUT jack to the TV's VHF/UHF jack.
3. Using an A/V cable, connect the VCR's Audio and Video OUT jacks to the TV's Audio and Video IN jacks.

> If the VCR you are connecting has an S VIDEO jack, you can use an S VIDEO cable for improved picture quality (compared to a combination audio/video cable). Because S VIDEO cables carry only the video signal, you will need audio cables for sound.

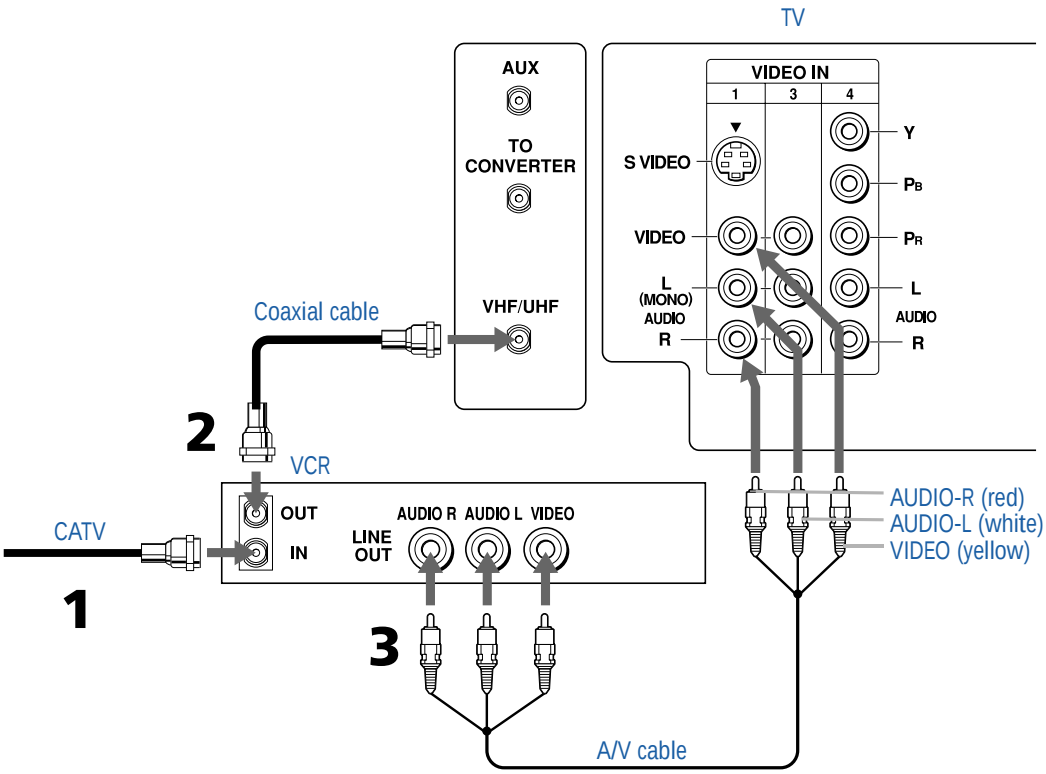

Downloaded from www.Manualslib.com manuals search engine

Connecting a VCR and Cable Box (KV-36FS17 only)

Use this hookup if:

- Your cable TV company scrambles some channels, but not all of them (pay channels vs. regular cable channels) and you therefore need to use a cable box, and
- You want to use the PIP feature.

With this setup you can:

- Use the TV remote control to change cable box channels when the signal is scrambled.
- Use the TV remote control to change TV channels when the signal is not scrambled. (Your TV's tuner provides a better signal than the cable box.)
- Use the PIP feature.
- Record both regular CATV and scrambled channels.

To connect a cable box and a VCR, you will need:

- A small, inexpensive device known as a splitter.
- Three coaxial cables.
- Either a combination audio / video cable, or an S VIDEO cable and audio cables.

1. Connect the CATV cable to the single (input) jack of the splitter.
2. Use a coaxial cable to connect one of the two output jacks of the splitter to the TV's VHF / UHF jack.
3. Use a coaxial cable to connect the other output jack of the splitter to the input jack of the cable box.
4. Use a coaxial cable to connect the output jack of the cable box to the input jack of the VCR.
5. Use the video line (yellow) of a combination audio / video (A / V) cable to connect the video output jack of the VCR to the video input jack of the TV.

> ✍ If the VCR has an S VIDEO jack, you can use an S VIDEO cable to improve picture quality, replace the yellow video cable of the combination A/V cable with the S VIDEO cable. (Do not connect both types of cable at the same time.) You will still need audio cables for sound.

Connect the left (white) and right (red) audio output channels of the VCR to the respective input channels on the TV.

(Continued on the next page)

Downloaded from www.Manualslib.com manuals search engine

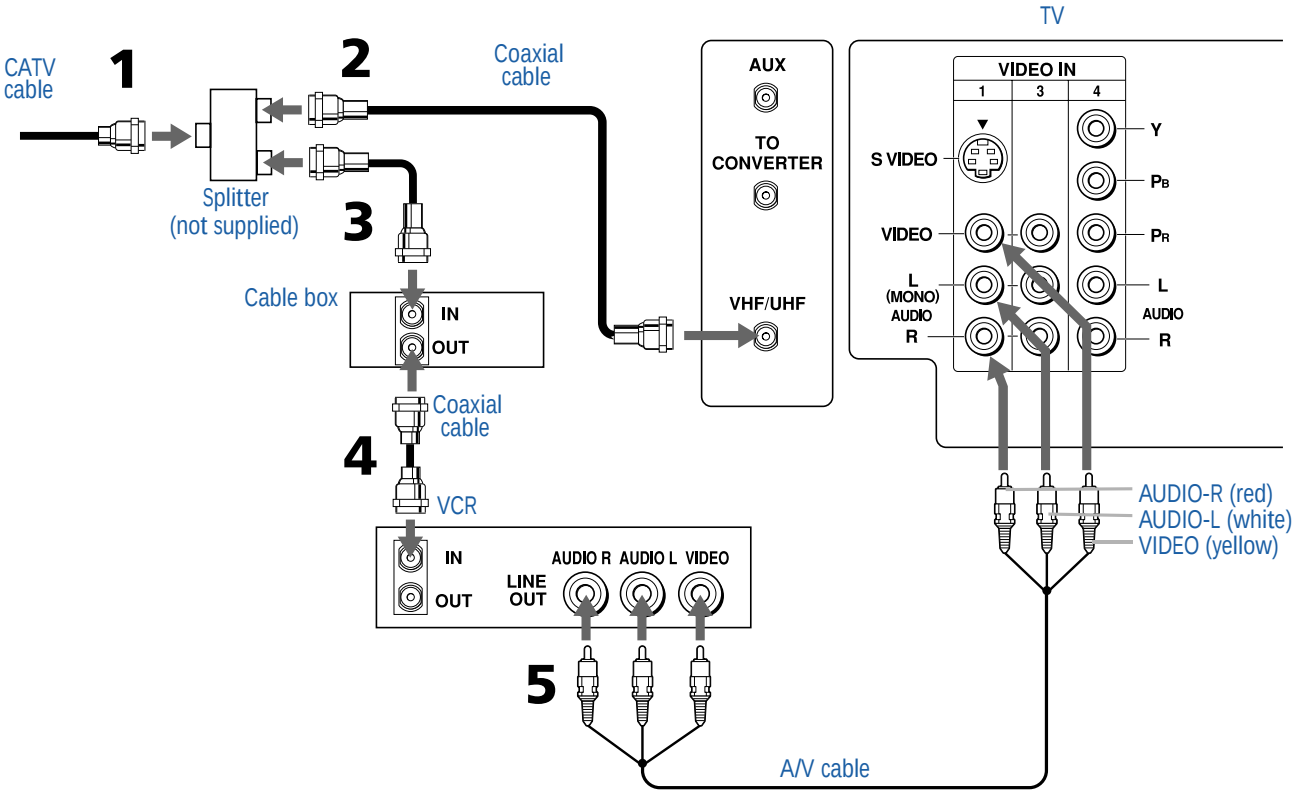

To view cable box channels

- ❑ Turn on the VCR and set it to the channel the cable box uses (channel 3 or 4). Set the TV to VIDEO 1. Use the cable box to switch channels.

To use the TV remote control to switch channels on the cable box

- ❑ Program the remote control as necessary. (See “Programming the Remote Control” on page 50.) Then use the remote control to switch cable box channels.

To use the TV remote control to switch channels on the VCR

- ❑ Program the remote control as necessary. (By default, the remote control is set for a Sony VCR; to change to another brand see “Programming the Remote Control” on page 50.) Then use the VCR buttons on the remote control to switch VCR channels.

Downloaded from www.Manualslib.com manuals search engine

To use PIP with the Cable Box

❑ Turn on the cable box and VCR. Use the remote control's TV/VIDEO (yellow) button to set the PIP output to VIDEO 1. Change the PIP channel via the cable box. (The cable box's tuner is used as the PIP video source; if you do not turn on the cable box, the PIP will not work.)

✍ This system is needed because the cable box unscrambles only one channel at a time (unlike regular cable, which makes all channels available concurrently).

Downloaded from www.Manualslib.com manuals search engine

Connecting Two VCRs for Tape Editing

If you connect two VCR's together, so you can record from one to the other, you may want to monitor the recording process. You can connect the recording VCR into your TV and then view what is being recorded. The procedure below shows you how to do this.

1. Using an A/V cable, connect the playback VCR's Audio and Video OUT jacks to the recording VCR's Audio and Video IN jacks.
2. Using an A/V cable, connect the recording VCR's Audio and Video OUT jacks to the TV's Audio and Video IN jacks.

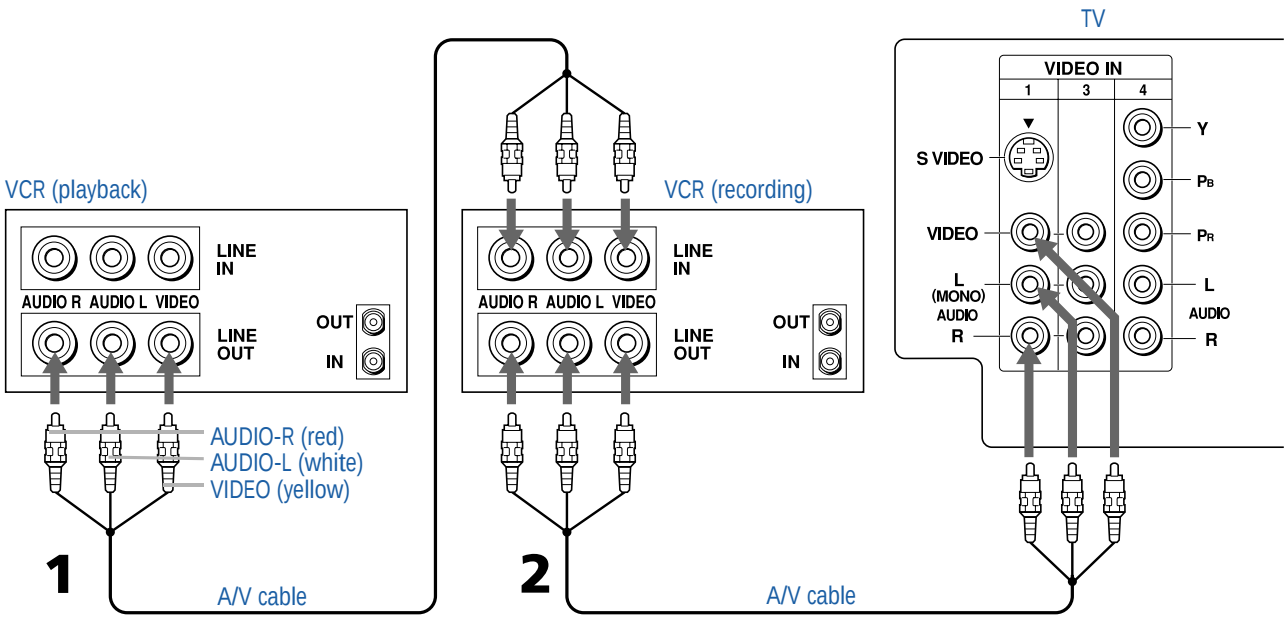

To change the video input of the VCR.

- ❑ See your VCR's user's guide for instructions.

To view what is being recorded

- ❑ Use the remote control to set the TV to the video input to which the recording VCR is connected. (VIDEO 1 in the illustration above.)

✍ If the VCRs you are connecting have S VIDEO jacks, you can use S VIDEO cables to improve picture quality, replace the yellow video cable of the combination A/V cable with the S VIDEO cable. (Do not connect both types of cable at the same time.) You will still need audio cables for sound.

Downloaded from www.Manualslib.com manuals search engine

Connecting a Satellite Receiver

1. Connect the satellite antenna cable to the satellite receiver's SATELLITE IN jack.
2. Using an A/V cable, connect the satellite receiver's Audio and Video OUT jacks to the TV's Audio and Video IN jacks.
3. Connect a coaxial cable from your cable or antenna to the TV's VHF/UHF jack.

> If the satellite receiver has an S VIDEO jack, you can use an S VIDEO cable to improve picture quality, replace the yellow video cable of the combination A/V cable with the S VIDEO cable. (Do not connect both types of cable at the same time.) You will still need audio cables for sound.

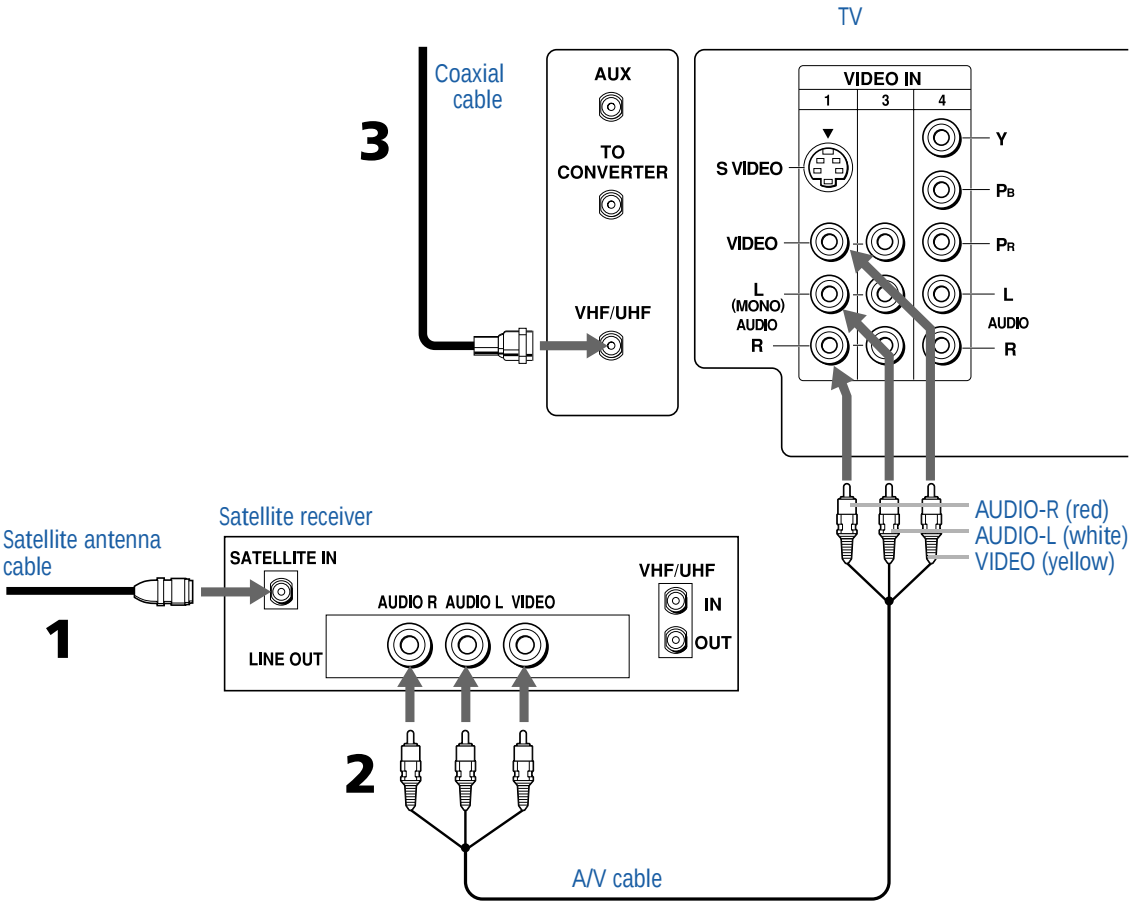

Downloaded from www.Manualslib.com manuals search engine

Connecting a Satellite Receiver with a VCR

1. Connect the satellite antenna cable to the satellite receiver's SATELLITE IN jack.
2. Connect the CATV cable to the VCR's VHF/UHF IN jack.
3. Using a coaxial cable, connect the VCR's OUT jack to the TV's VHF/UHF jack.
4. Using an A/V cable, connect the satellite receiver's Audio and Video OUT jacks to the VCR's Audio and Video IN jacks.
5. Using an A/V cable, connect the VCR's Audio and Video OUT jacks to the TV's Audio and Video IN jacks.

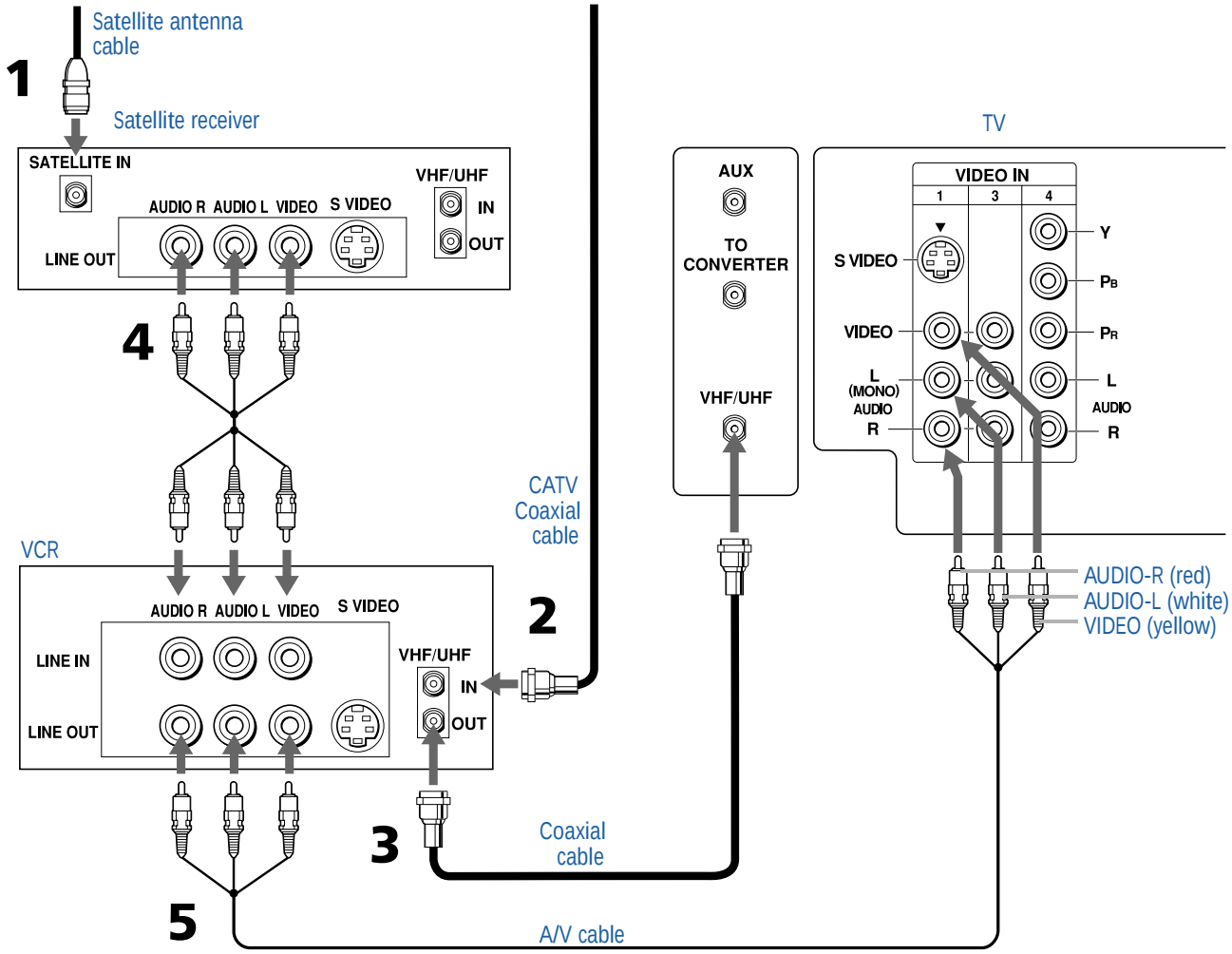

If the satellite receiver and VCR have S VIDEO jacks, you can use an S VIDEO cable to improve picture quality, replace the yellow video cable of each combination A/V cable with the S VIDEO cable. (Do not connect both types of cable at the same time.) You will still need audio cables for sound.

Downloaded from www.Manualslib.com manuals search engine

To change VCR video input

- ❑ See your VCR's user's guide for instructions.

To watch satellite TV, or the VCR

- ❑ Use the TV/VIDEO on the remote control to select VIDEO 1. (The TV must be turned on.)

To watch cable TV

- ❑ Use the TV/VIDEO on the remote control to select VHF / UHF. (The TV must be turned on.)

Downloaded from www.Manualslib.com manuals search engine

Connecting an Audio Receiver

For improved sound quality, you may want to send the TV's audio signals to your stereo system. The procedure below tells you how.

1 Using audio cables, connect the TV's Audio OUT jacks to the audio receiver's Audio LINE IN jacks.

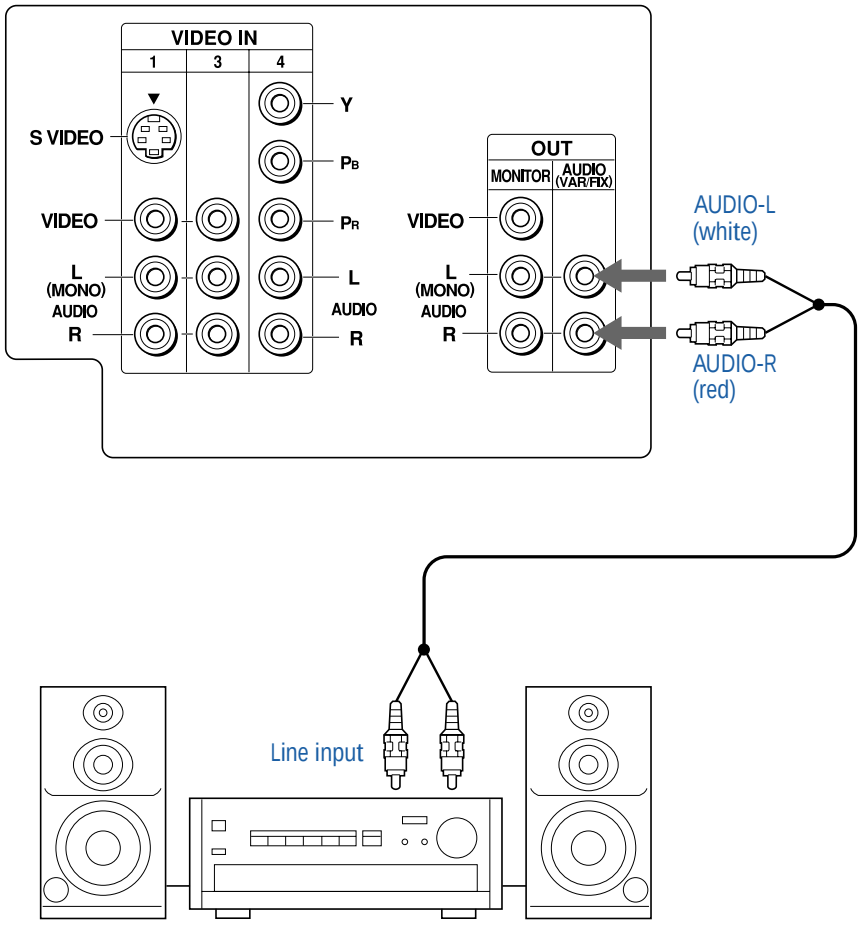

Downloaded from www.Manualslib.com manuals search engine

Connecting a DVD Player with Component Video Connectors

This is the preferred hookup to use if your DVD player has component video (Y, P_B, P_R) jacks.

1. Using three separate component video cables, connect the DVD player's Y, P_B and P_R jacks to the Y, P_B and P_R jacks on the TV. Use the VIDEO 4 connections.

   ✍ The Y, P_B and P_R jacks on your DVD player are sometimes labeled Y, C_B and C_R, or Y, B-Y and R-Y. If so, connect the cables to like colors.

2. Using an audio cable, connect the DVD player's Audio OUT jacks to the TV's Audio IN jacks. Be sure to use the same column (VIDEO 4) of inputs that you used for the video connection.

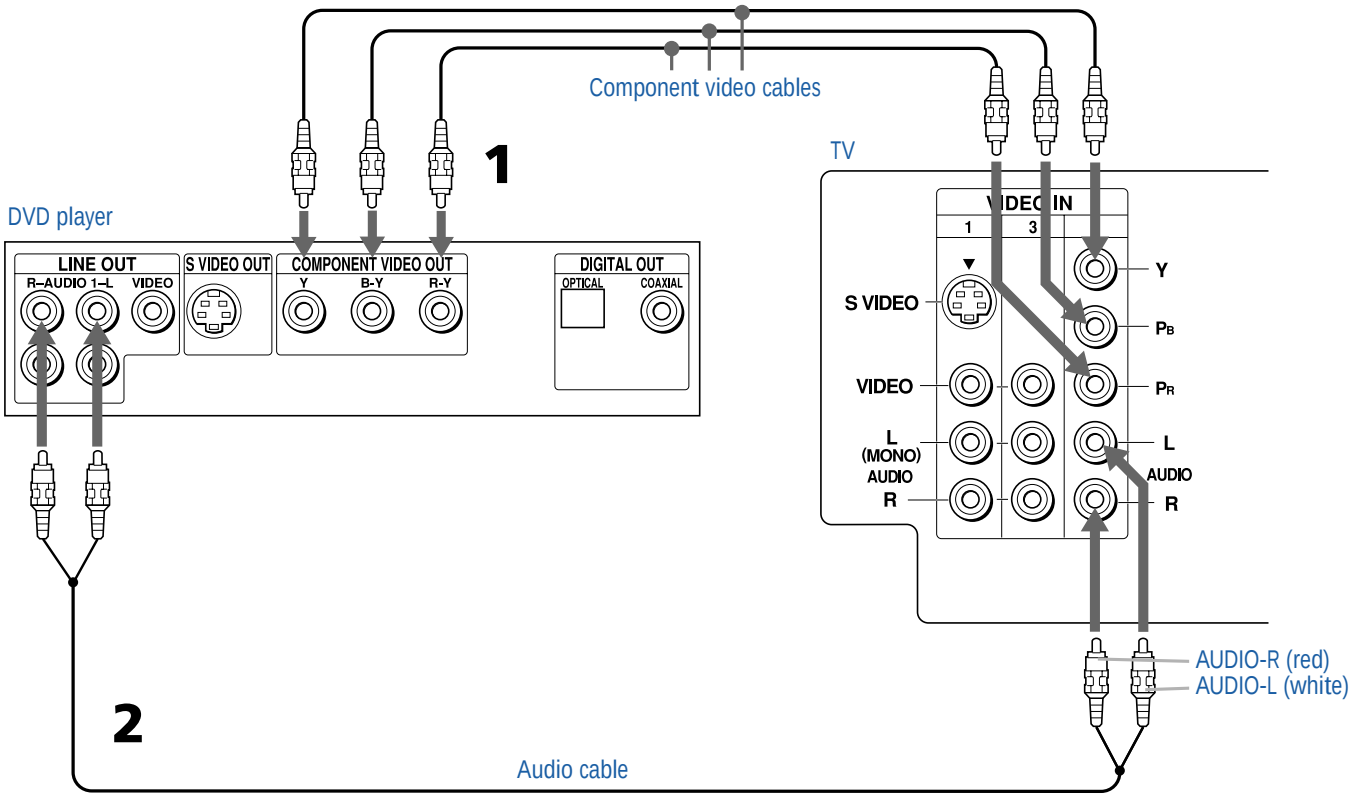

✍ You cannot record the signal from any equipment connected into the Y, P_B, P_R jacks.

Downloaded from www.Manualslib.com manuals search engine

Connecting a DVD Player with A/V Connectors

Use this hookup if your DVD player does not have component video (Y, P_B, P_R) jacks.

> An S VIDEO connection will give a good quality video signal, but if your DVD player has component video, that connection (described on the previous page) will give an even better video signal.

1. Using audio cables, connect the DVD player's Audio OUT jacks to the TV's Audio IN jacks.
2. Using an S VIDEO cable, connect the DVD player's S VIDEO jack to the TV's S VIDEO jack.

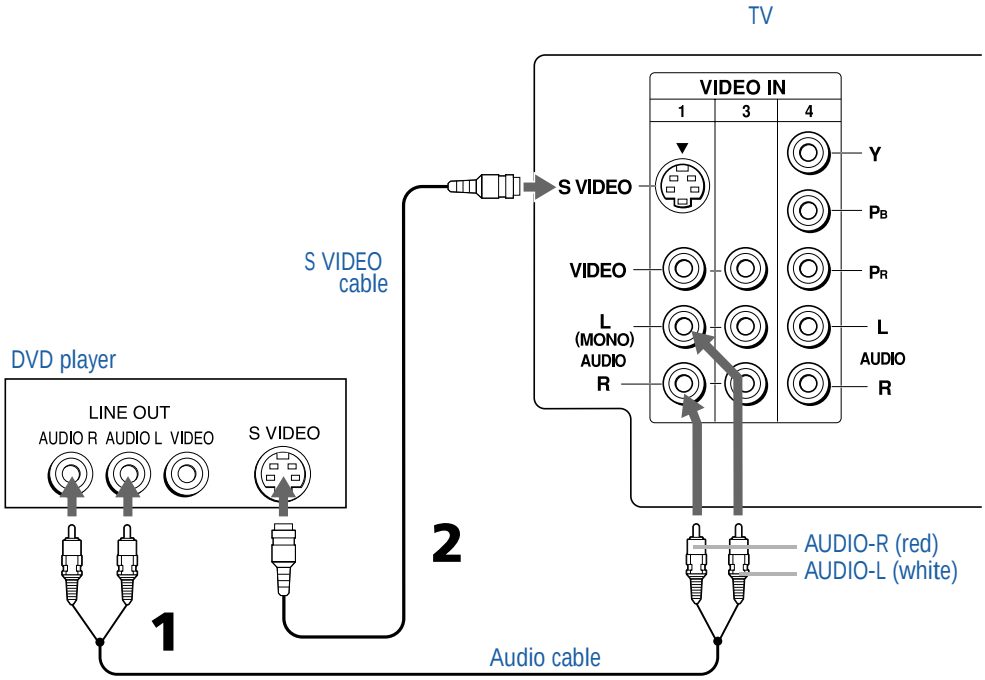

To switch between your TV and DVD

- Use the TV/VIDEO button on the remote control to switch from one input device to another.

Downloaded from www.Manualslib.com manuals search engine

Connecting a Camcorder

For easy connection of a camcorder, the TV has front Audio and Video inputs (shown below). If you prefer, however, you can connect the camcorder to the TV's rear Audio and Video IN jacks.

1 Using A/V cables, connect the camcorder's Audio and Video OUT jacks to the TV's Audio and Video IN jacks.

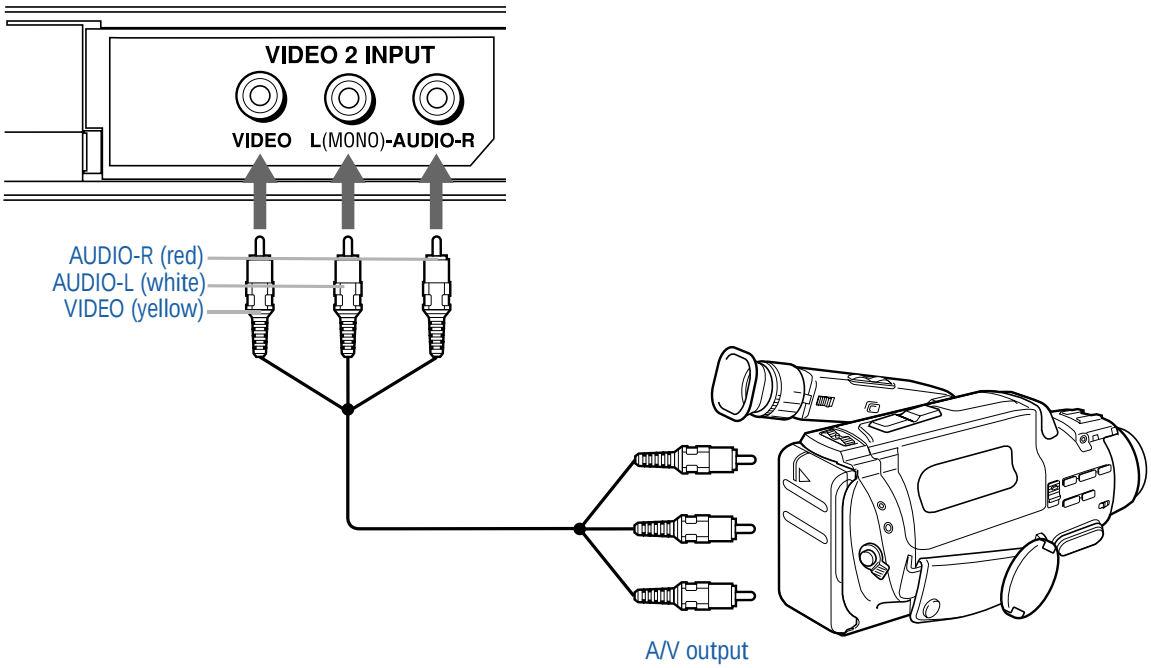

If you have a mono camcorder, connect its audio output to the TV's AUDIO L jack.

✍ If the camcorder has an S VIDEO jack, you can use an S VIDEO cable to improve picture quality, replace the yellow video cable of the combination A/V cable with the S VIDEO cable. (Do not connect both types of cable at the same time.) You will still need audio cables for sound.

To view the camera's output

❑ Use the TV's remote control to set the appropriate input on the TV (VIDEO 2, in the illustration).

Downloaded from www.Manualslib.com manuals search engine

Setting Up the TV Automatically

After you finish connecting your TV, you need to run Auto Setup to set up your channels. The Auto Setup screen appears when you turn your TV on for the first time after installing it. If you do not want to set up the channels at this time, you can do it later by using the Auto Program feature in the Channel menu (see page 40).

✍ The Auto Setup feature does not apply for installations that use a cable box for all channel selection.

Using Auto Setup

1. Press POWER to turn on the TV.
2. Press the TV function button on the remote control.
3. Press CH+ on the front of your TV to run the Auto Setup or press CH– to exit. If you use the channel buttons on your remote control, be sure to use the main set of buttons.

To reset the TV to factory settings

1. Turn the TV on.
2. Hold down the RESET button on the remote control.
3. Press and release the POWER button on the TV. (The TV will turn itself off, then back on.)
4. Release the RESET button.

Downloaded from www.Manualslib.com manuals search engine

Using the Features

Overview

This chapter describes how to use special features of your TV.

Topic	Page
Using Favorite Channels	30
Using Picture in Picture (PIP) (KV-36FS17 only)	31

Downloaded from www.Manualslib.com manuals search engine

Using Favorite Channels

The Favorite Channel feature lets you select programs from a list of favorite channels that you specify.

To display a list of your favorite channels

1. If you have not already done so, create a list of favorite channels. (See the Favorite Channels section of "Selecting Channel Options" on page 40.)
2. If any menus are open, close them.
3. Press ⊹. (The Favorite Channels options appear.)

4. Press ↑ or ↓ to highlight the channel you want to watch. (If you have a KV-36FS17 model, the PIP window will open, showing a preview of the highlighted Favorite Channel.)
5. When you find the channel you want, press ⊹ to select it.

Downloaded from www.Manualslib.com manuals search engine

Using Picture in Picture (PIP) (KV-36FS17 only)

Picture in Picture (PIP) allows you to watch two channels simultaneously — one in the main window and another in a secondary (PIP) window.

Displaying Picture in Picture

To use PIP:

1. Make sure your TV is tuned to a channel that you know is airing programming.
2. Press the ⧉ button (or the button labeled PIP). The window picture appears.
3. Use the yellow-labeled buttons on your remote control (see diagram) to control the PIP features (which are listed on the next page).

To check your PIP:

1. Tune your TV to a channel that you know is airing programming.
2. Press SWAP and select that same channel as the main window. You should now have the same program playing in both your main window and your picture window.
3. Use the PIP (yellow) CH+/- buttons to change the channel in the picture window.

✍ You must press TV (FUNCTION) before you can control PIP with the yellow-labeled buttons.

The AUX input cannot be viewed in the PIP window.

(Continued on the next page)

Downloaded from www.Manualslib.com manuals search engine

(Continued from the previous page)

4 Now use the main CH+/- buttons of your remote control to change the channel in the main window. If this does not work, check “Troubleshooting” on page 54 for potential solutions.

PIP Functions

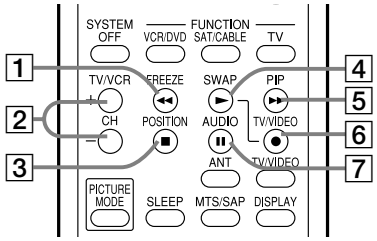

RM-Y181 remote control

Yellow-labeled PIP Button	Description
1 FREEZE	Freezes the window picture. Press again to restore the picture. The main window continues to play as usual.
2 CH +/-	Changes the channel in the window picture. To change the channel in the main window, use the main CH+/- buttons at the bottom of the remote control.
3 POSITION	Moves the location of the window picture among the four corners of the screen.
4 SWAP	Switches the main picture with the window picture. Press again to change them back.
5 PIP	Turns the PIP feature on and off. Press repeatedly to change the window size (1/9, 1/16, OFF).
6 TV/VIDEO	Cycles through available video equipment you have connected to the TV.
7 AUDIO	Alternates sound between the main picture and the window picture. The sound symbol (♪) appears for 3 seconds, indicating whether you are hearing sound from the main picture or the window picture.

Downloaded from www.Manualslib.com manuals search engine

To change channels/programs in the PIP window

- Use the yellow PIP CH+/- button to scroll through the TV channels.
- Use the yellow TV/VIDEO button to cycle through your other video equipment connected to the TV, such as your VCR, DVD player or Satellite Receiver.

Setups that affect your ability to use PIP

- Any video equipment you have connected to the AUX input cannot be viewed in the PIP window.
- If you are viewing all channels through a cable box, the PIP feature will not work. The cable box only unscrambles one signal at a time, so the window picture will be the same as the main picture.
- You can use PIP to see pictures from different sources on your TV. For example, you can have a regular (CATV) channel and the output from a VCR or DVD player or satellite receiver on screen at the same time using PIP. To do this:

  1. Connect the CATV cable to the UHF/VHF input on the back of the TV.
  2. Connect the peripheral (VCR or DVD player or satellite receiver) to any of the VIDEO IN inputs on the the back of the TV.
  3. Tune to one image in the main picture.
  4. Tune to a second image in the PIP window.

  You can then SWAP the images on the TV screen.

Be sure to label your video sources to make them easier to find in the Display easier. See "Video Label" on page 47 for labeling instructions.

✍ You cannot use a signal from the AUX connection with PIP.

Downloaded from www.Manualslib.com manuals search engine

Using the Menus

Overview

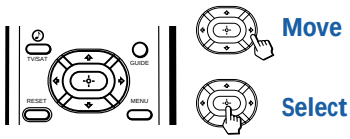

Arrow buttons

Opening and choosing a menu:

1. Press MENU to display the Menu screen.
2. Use the arrow buttons to move to the desired menu icon. Press ⊙ to select it.
3. Use the arrow buttons to scroll up and down through the features.
4. See the specific menu page for instructions on moving through the menu.

To end a menu session:

Press MENU again

To end one menu session and move to another:

Press ⇧ to return to the menu icons.

The Menu gives you access to the following features:

Menu Icon	Description	Page
Video	Allows you to make adjustments to your picture settings. It also allows you to customize the Picture Mode based on the type of program you are viewing.	36
Audio	Offers enhanced audio options such as listening to second audio programming (SAP) or customizing the Effect of the sound on your TV.	38
Channel	Allows you to set up a Favorite Channel list, run the Auto Program function, and more.	40
Parent	Lets you control the viewing of programs based on their ratings.	42
Timer	Lets you set the clock on your TV and allows you to program your TV for scheduled viewing using the Timers.	45
Setup	Provides several options for setting up your channels, labeling your video inputs, and selecting the language of the on-screen menus.	46
Basic	Provides quick access to frequently used settings.	48

Downloaded from www.Manualslib.com manuals search engine

Using the Video Menu

To select the Video Menu

1. Press MENU.
2. Use the arrow buttons to move to the Video icon and press ⊕.
3. Use the arrow buttons to scroll up and down through the options.
4. Press ⊕ to select a feature. That feature's adjustment appears.
5. Use the arrow buttons to make the desired adjustments.
6. Press ⊕ to select / set.
7. Press MENU to exit the menu screen.

To restore the factory default settings for Picture, Brightness, Color, Hue, Sharpness, Color Temp and VM.

❑ Press RESET on the remote control when in the Video menu.

Selecting Video Options

To change from one Video Mode to another, use the PICTURE MODE button on the remote control.

The Video Menu includes the following options.

Option	Description	
Mode *Customized picture viewing*	Vivid	Select for enhanced picture contrast and sharpness.
	Standard	Select for standard picture settings.
	Movie	Select to display a softer picture.
	Sports	Select to display a brighter, more intense picture.
	✍ You can alter the Video Menu settings (Picture, Brightness, Color, etc.) for each Mode.	
Picture	Adjust to increase picture contrast and deepen the color, or decrease picture contrast and soften the color.	
Brightness	Adjust to brighten or darken the picture.	
Color	Adjust to increase or decrease color intensity.	
Hue	Adjust to increase or decrease the green tones.	
Sharpness	Adjust to sharpen or soften the picture.	

Downloaded from www.Manualslib.com manuals search engine

Option	Description	
Color Temp *White intensity adjustment*	Choose from three color temperatures:	
	Cool	Select to give the white colors a blue tint.
	Neutral	Select to give the white colors a neutral tint.
	Warm	Select to give the white colors a red tint (NTSC-Standard).
VM *Velocity Modulation*	Sharpens picture definition to give every object a sharp, clean edge. Select from High, Low, OFF.	

Downloaded from www.Manualslib.com manuals search engine

Using the Audio Menu

To select the Audio Menu

1. Press MENU.
2. Use the arrow buttons to move to the Audio icon and press ⊕.
3. Use the arrow buttons to scroll up and down through the options.
4. Press ⊕ to select an option. That option's settings appear.
5. Use the arrow buttons to scroll through the settings.
6. Press ⊕ to select the desired setting.
7. Press MENU to exit the menu screen.

To restore the factory default settings for Treble, Bass, and Balance

❑ Press RESET on the remote control when in the Audio menu.

Selecting Audio Options

As a shortcut to using the menus, use the ♪ button on the remote control to cycle through available audio settings.

The Audio Menu includes the following options:

Option		Description
Treble		Adjust to decrease or increase higher-pitched sounds.
Bass		Adjust to decrease or increase lower-pitched sounds.
Balance		Adjust to emphasize left or right speaker balance.
MTS *Enjoy stereo, bilingual and mono programs*	Stereo	Select for stereo reception when viewing a program broadcast in stereo.
	Auto-SAP	Select to automatically switch the TV to second audio programs when a signal is received. (If no SAP signal is present, the TV remains in Stereo mode.)
	Mono	Select for mono reception. (Use to reduce noise during weak stereo broadcasts.)
Speaker	ON	Select to turn on the TV speakers.
	OFF	Select to turn off the TV speakers and listen to the TV's sound only through your external audio system speakers.

Downloaded from www.Manualslib.com manuals search engine

Option	Description	
Audio Out *Easy control of volume adjustments*	This option can be set only when the Speaker option is set to OFF.	
	Variable	The TV's speakers are turned off, but the volume output from your audio system can still be controlled by the TV's remote control.
	Fixed	The TV's speakers are turned off and the volume output of the TV is fixed. Use your audio receiver's remote control to adjust the volume through your audio system.

Downloaded from www.Manualslib.com manuals search engine

Using the Channel Menu

To select the Channel Menu

1. Press MENU.
2. Use the arrow buttons to move to the Channel icon and press ⊕.
3. Use the arrow buttons to scroll up and down through the options.
4. Press ⊕ to select a feature. That feature's options appear.
5. Use the arrow buttons to scroll through the options.
6. Press ⊕ to select the desired option.
7. Press MENU to exit the menu screen.

Selecting Channel Options

The Channel Menu includes the following options:

Option	Description	
Favorite Channel	1 Press ⊕ to select a favorite channel number. 2 Use the arrow buttons to scroll through the channels until you find the channel you want to add to your favorites. 3 Press ⊕ to select it.	
Cable	ON	Select if you are receiving cable channels with a CATV cable.
	OFF	Select if you are using an antenna.
	✍ You should run Auto Program after changing the cable setting.	
Channel Fix *Useful when you have a cable box or satellite receiver connected*	2-6	"Fix" your TV's channel setting to 3 or 4 and use the cable box or Satellite receiver to change channels. Select one of these settings if you have connected the device to the VHF/UHF jack.
	AUX 2-6	Same as 2-6, except you select one of these settings if you have connected the device to the AUX jack (see page 11).
	VIDEO 1	Use this setting if you have connected the device to the Audio and Video IN jacks.
Auto Program	Automatically programs the TV for all receivable channels.	

Downloaded from www.Manualslib.com manuals search engine

Option	Description
Channel Skip/Add	Removes and adds viewable channels. **1** Use the arrow buttons to scroll through the channels until you find the channel you want to skip / add. **2** Press ⊕ to select it. **3** Press the arrow buttons to toggle between "Add" or "Skip." **4** Press ⊕ to select.
Channel Label	Label up to 40 channels with their station call letters.

Channels that you set to be skipped can be accessed only with the 0-9 buttons.

Downloaded from www.Manualslib.com manuals search engine

Using the Parent Menu

The Parent menu allows you to set up the TV to block programs according to their content and rating levels.

To select the Parent Menu

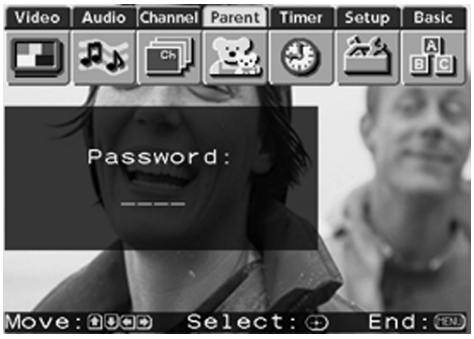

1. Press MENU.
2. Use the arrow buttons to move to the Parent icon and press ⊕.
3. Use the 0-9 buttons on the remote control to enter your four-digit password.
4. Confirm your password by entering it again. (The Parent menu options appear.)
5. Use the arrow buttons to scroll through the settings.
6. Press ⊕ to select the desired setting.
7. Press MENU to exit the menu screen.

✍ You need your password for any future access into the Parent menu. If you lose your password, see "Lost password" on page 55.

Using the Parent Menu

The Parent menu includes the following options.

Option	Description	
Parental Lock *Turn ratings on/off and select a rating system*	OFF	Parental lock is off. No programs are blocked from viewing.
	Child	Maximum ratings permitted are: ❑ US: TV-Y, TV-G, G ❑ Canada: C, G
	Youth	Maximum ratings permitted are: ❑ US: TV-PG, PG ❑ Canada: 8 ans+
	Young Adult	Maximum ratings permitted are: ❑ US: TV-14, PG-13 ❑ Canada: 14+, 13 ans+
	Custom	Select to set ratings manually. ❑ US: See page 43 for details. ❑ Canada: See page 44 for details.
Change Password	For changing your password.	

If you are not familiar with the Parental Guideline rating system, you should select Child, Youth, or Young Adult to help simplify the rating selection. To set more restrictive ratings, select Custom.

For descriptions of Child, Youth, and Young Adult ratings, see page 43.

Downloaded from www.Manualslib.com manuals search engine

US Models: Selecting Custom Rating Options

For US models, the Custom Rating Menu includes the following options. (For Canadian models, see page 44.)

Option	Description	
Movie Rating	G	All children and General Audience.
	PG	Parental Guidance suggested.
	PG-13	Parental Guidance for children under 13.
	R	Restricted viewing, parental guidance is suggested for children under 17.
	NC-17 and X	No one 17 or under allowed.
TV Rating *Block programs by their rating, content or both*	Age-Based Options	
	TV-Y	All children.
	TV-Y7	Directed to older children.
	TV-G	General Audience.
	TV-PG	Parental Guidance suggested.
	TV-14	Parents Strongly cautioned.
	TV-MA	Mature Audience only.
	Content-Based Options	
	FV	Fantasy Violence.
	D	Suggestive Dialogue.
	L	Strong Language.
	S	Sexual situations.
	V	Violence.
Unrated *Block programs or movies that are broadcast without a rating*	Block	Blocks all programs and movies that are broadcast without a rating.
	Allow	Allows programs and movies that are broadcast without a rating.

The content ratings will increase depending on the level of the age-based rating. For example, a program with a TV-PG V (Violence) rating may contain moderate violence, while a TV-14 V (Violence) rating may contain more intense violence.

To ensure maximum blocking capability, the age-based ratings should be blocked.

If you block unrated TV programs, be aware that the following types of programs may be blocked: emergency broadcasts, political programs, sports, news, public service announcements, religious programs and weather.

Viewing Blocked Programs

You can view blocked programs by entering the password. Press the ENTER button when tuned to a blocked program, then enter the password. This temporarily switches off the Parental Lock. To reactivate the Parental Lock settings, turn off the TV. When the TV is turned on again, your Parental Controls settings are reactivated.

(Continued on the next page)

Downloaded from www.Manualslib.com manuals search engine

(Continued from the previous page)

Canadian Models: Selecting Custom Rating Options

For Canadian models, the Custom Rating Menu includes the following options. (For US models, see page 43.)

Option	Description	
English Rating	C	All children.
	C8	Children 8 years and older.
	G	General programming.
	PG	Parental Guidance.
	14+	Viewers 14 and older.
	18+	Adult programming.
French Rating	G	General programming.
	8 ans+	Not recommended for young children.
	13 ans+	Not recommended for ages under 13.
	16 ans+	Not recommended for ages under 16.
	18 ans+	Programming restricted to adults.
USA Rating	See “US Models” on page 43 for details.	

Viewing Blocked Programs

You can view blocked programs by entering the password. Press the ENTER button when tuned to a blocked program, then enter the password. This temporarily switches off the Parental Lock. To reactivate the Parental Lock settings, turn off the TV. When the TV is turned on again, your Parental Controls settings are reactivated.

Downloaded from www.Manualslib.com manuals search engine

Using the Timer Menu

To select the Timer Menu

1 Press MENU.

2 Use the arrow buttons to move to the Timer icon and press ⊕.

To set the Current Time

1 Use the arrow buttons to select "Current Time", then press ⊕.

2 If it is currently Daylight Savings Time, be sure to set the mode to "ON" first. (Daylight Savings Time starts in the Spring, and ends in the Fall.)

3 Use the arrow buttons to enter the correct time, then press ⊕.

4 Press MENU to exit the menu screen.

To set the Timer

Before setting the timer, be sure to set your TV's clock to the current time (and, if appropriate, to Daylight Savings Mode).

1 Use the arrow buttons to move to "Timer 1" or "Timer 2", then press ⊕.

2 Use the arrow buttons to enter your date, time and channel preferences, then press ⊕ to select each one.

3 Press MENU to exit the menu screen.

To reset the Clock or Timers

❑ Press RESET on the remote control, when in the Timer menu, to reset to the factory defaults.

Selecting Timer Options

The Timer Menu includes the following options:

Option	Description	
Timer 1 Timer 2	Program	Select to set the Timer by day, time, duration, and channel.
	OFF	Select to turn off the Timer. (Your previous settings will be saved.)
Current Time	Set the current time.	
Daylight Savings	ON	Select in the spring to turn on this mode during Daylight Saving Time.
	OFF	Select in the fall to turn off this mode at the end of Daylight Saving Time.

Downloaded from www.Manualslib.com manuals search engine

Using the Setup Menu

To select the Setup Menu

1. Press MENU.
2. Use the arrow buttons to move to the Setup icon and press ⊕.
3. Use the arrow buttons to scroll through the features.
4. Press ⊕ to select a feature. (That feature's options appear.)
5. Use the arrow buttons to scroll through the options.
6. Press ⊕ to select the desired option.
7. Press MENU to exit the menu screen.

Selecting Setup Options

The Setup Menu includes the following options:

Option	Description	
Caption Vision	Allows you to select from three closed-caption modes (for programs that are broadcast with closed caption).	
	CC1, CC2, CC3, CC4	Displays a printed version of the dialog or sound effects of a program. (Should be set to CC1 for most programs.)
	TEXT1, TEXT2, TEXT3, TEXT4	Displays network/station information presented using either half or the whole screen (if available). For closed captioning, set to CC1.
	XDS (Extended Data Service)	Displays a network name, program name, program length, and time of the show (if the broadcaster offers this service).
	OFF	Turns off Caption Vision.

Downloaded from www.Manualslib.com manuals search engine

Option	Description	
Video Label	Allows you to label the audio/video components you connected to the TV, so you can identify them when using the TV/VIDEO button. When in the Setup menu's Video Label feature, use the arrow buttons to highlight an input to label, then press ⊕ to select it. Use the arrow buttons to scroll through the labels. Press ⊕ to select the component you connected to each of the input jacks on the back of your TV. Select "Skip" if you do not have a component connected to a particular set of input jacks.	
	VIDEO 1/2/3	Choose VHS, 8mm, Beta, LD, Game, SAT, DVD, Web, Receiver, DTV, Skip
	VIDEO 4	Choose DVD, DTV, Skip
	✍ If you select "Skip", your TV skips this connection when you press the TV/VIDEO button.	
Tilt Correction	Allows you to correct any tilt of the picture.	
Language	Select to display all on-screen menus in your language of choice.	
16:9 Enhanced	Provides enhanced picture resolution for widescreen (anamorphic) sources, such as selected DVD titles (only available when the TV is in VIDEO mode). Press TV/VIDEO and select from one of the following options:	
	ON	To activate.
	OFF	To turn off 16:9.
Demo	Runs a demonstration of on-screen menus.	

To use this feature with widescreen DVDs, set your DVD player to 16:9 aspect ratio.

Downloaded from www.Manualslib.com manuals search engine

Using the Basic Menu

To select the Basic Menu

1. Press MENU.
2. Use the arrow buttons to move to the Basic icon and press ⊕.
3. Use the arrow buttons to scroll through the features.
4. Press ⊕ to select a feature. (That feature's options appear.)
5. Use the arrow buttons to scroll through the options.
6. Press ⊕ to select the desired option.
7. Press MENU to exit the menu screen.

Selecting Basic Options

The Basic Menu includes the following options:

Option	Description
Picture	Adjust the picture contrast.
Caption Vision	Displays your current advanced-menu setting: (CC1–4, TEXT 1–4, or XDS) and OFF.
Advanced Menu	Select to return to the advanced menus.

As a shortcut to using the menus, use the ♪ button on the remote control to cycle through available audio settings.

Downloaded from www.Manualslib.com manuals search engine

Other Information

Overview

This chapter includes the following topics:

Topic	Page
Programming the Remote Control	50
Operating Other Components with Your TV Remote Control	52
Troubleshooting	54
Specifications	56
Index	59

Downloaded from www.Manualslib.com manuals search engine

Programming the Remote Control

The remote control is preset to operate Sony-brand video equipment.

If you have video equipment other than Sony brand that you want to control with the TV's remote control, use the following procedure to program the remote control.

✍ The equipment must have infrared (IR) remote capability in order to be used with the remote control.

1 Check the list of "Manufacturer's Codes" on page 51, and find the three-digit code number for the manufacturer of your component. (If more than one code number is listed, use the number listed first.

✍ You must do step 4 within 10 seconds of step 3, or you must redo steps 2 and 3.

2 Press CODE SET.

3 Press the function button for the type of component you want to control with the TV's remote control (VCR / DVD or SAT / CABLE).

4 Enter the three-digit manufacturer's code number.

5 Press ENTER.

6 To check if the code number works, aim the TV's remote control at the component and press the green POWER button that corresponds with that component. If it responds, you are done. If not, try using another code listed for that manufacturer.

- If more than one code number is listed, try entering them one by one until you come to the correct code for your component.
- If you enter a new code number, the code number you previously entered at that setting is erased.
- In some cases, you may not be able to operate your component with the supplied remote control. In such cases, use the component's own remote control unit.
- Whenever you remove the batteries to replace them, the code numbers may revert to the factory setting and must be reset.

Downloaded from www.Manualslib.com manuals search engine

Manufacturer's Codes

VCRs

Manufacturer	Code
Sony	301
Admiral (M. Ward)	327
Aiwa	338, 344
Audio Dynamic	314, 337
Broksonic	319, 317
Canon	309, 308
Citizen	332
Craig	302, 332
Criterion	315
Curtis Mathes	304, 338, 309
Daewoo	341, 312, 309
DBX	314, 336, 337
Dimensia	304
Emerson	319, 320, 316, 317, 318, 341
Fisher	330, 335
Funai	338
General Electric	329, 304, 309
Go Video	322, 339, 340
Goldstar	332
Hitachi	306, 304, 305,338
Instant Replay	309, 308
JC Penney	309, 305, 304, 330, 314, 336, 337
JVC	314, 336, 337, 345, 346, 347
Kenwood	314, 336, 332, 337
LXI (Sears)	332, 305, 330, 335, 338
Magnavox	308, 309, 310
Marantz	314, 336, 337
Marta	332
Memorex	309, 335
Minolta	305, 304
Mitsubishi / MGA	323, 324, 325, 326
Multitech	325, 338, 321
NEC	314, 336, 337
Olympic	309, 308
Optimus	327
Panasonic	308, 309, 306, 307
Pentax	305, 304
Philco	308, 309
Philips	308, 309, 310
Pioneer	308
Quasar	308, 309, 306
RCA / PROSCAN	304, 305, 308, 309, 311, 312, 313, 310, 329
Realistic	309, 330, 328, 335, 324, 338
Sansui	314
Samsung	322, 313, 321
Sanyo	330, 335
Scott	312, 313, 321, 335, 323, 324, 325, 326
Sharp	327, 328
Shintom	315
Signature 2000 (M. Ward)	338, 327
SV2000	338
Sylvania	308, 309, 338, 310
Symphonic	338
Tashiro	332
Tatung	314, 336, 337
Teac	314. 336, 338, 337
Technics	309, 308
Toshiba	312, 311
Wards	327, 328, 335, 331, 332
Yamaha	314, 330, 336, 337
Zenith	331

Laserdisc Players

Manufacturer	Code
Sony	701
Panasonic	704, 710
Pioneer	702

DVD Players

Manufacturer	Code
Sony	751
Hitachi	758
JVC	756
Magnavox	757
Mitsubishi	761
Oritron	759
Panasonic	753
Philips	757
Pioneer	752
RCA	755
Samsung	758
Toshiba	754
Zenith	760

Cable Boxes

Manufacturer	Code
Sony	230
Hamlin / Regal	222, 223, 224, 225, 226
Jerrold / G. I.	201, 202, 203, 204, 205, 206, 207, 208, 218
Oak	227, 228, 229
Panasonic	219, 220, 221
Pioneer	214, 215
Scientific Atlanta	209, 210, 211
Tocom	216, 217
Zenith	212, 213

Satellite Receivers

Manufacturer	Code
Sony	801
Dish Network	810
Echostar	810
General Electric	802
Hitachi	805
Hughes	804
Mitsubishi	809
Panasonic	803
RCA / PROSCAN	802, 808
Toshiba	806, 807

Downloaded from www.Manualslib.com manuals search engine

Operating Other Components with Your TV Remote Control

Operating a VCR

To Do This ...	Press
Turn on / off	VCR/DVD (green POWER button)
Select VCR	VCR/DVD (FUNCTION button)
Change channels	CH +/-
Record	► and ● simultaneously.
Play	►
Stop	■
Fast forward	►►
Rewind the tape	◄◄
Pause	▮▮ (press again to resume normal playback)
Search the picture forward or backward	►► or ◄◄ during playback (release to resume normal playback)
Change input mode	TV/VCR

Operating a DVD Player

To Do This ...	Press
Turn on / off	VCR/DVD (green POWER button)
Select DVD	VCR/DVD (FUNCTION button)
Play	►
Stop	■
Pause	▮▮ (press again to resume normal playback)
Step through different tracks of an audio disc	►► to step forward, or ◄◄ to step backward
Step through different chapters of a video disc	CH+ to step forward, or CH- to step backward
Select tracks directly	0-9 buttons
Display the menu (Setup)	MENU

Downloaded from www.Manualslib.com manuals search engine

Operating a Cable Box

To Do This ...	Press
Turn on / off	SAT/CABLE (green POWER button)
Select Cable Box	SAT/CABLE (FUNCTION button)
Select a channel	0-9 buttons, ENTER
Change channels	CH +/-
Back to previous channel	JUMP

Operating a Satellite Receiver

To Do This ...	Press
Turn on / off	SAT/CABLE (green POWER button)
Select Satellite Receiver	SAT/CABLE (FUNCTION button)
Select a channel	0-9 buttons, ENTER
Change channels	CH +/-
Back to previous channel	JUMP
Change input mode	TV/SAT
Display channel number	DISPLAY
Display DBS guide	GUIDE
Display DBS menu	MENU
Move highlight (cursor)	arrows
Select item	✣ button

Operating an MDP (Laserdisc Player)

To Do This ...	Press
Turn on / off	VCR/DVD (green POWER button)
Select MDP	VCR/DVD (FUNCTION button)
Play	►
Stop	■
Pause	❚❚ (press again to resume normal playback)
Search the picture forward or backward	►► or ◄◄ during playback (release to resume normal playback)
Search a chapter forward or backward	CH +/-

Downloaded from www.Manualslib.com manuals search engine

Troubleshooting

Problem	Possible Remedies
Reset TV to factory settings	❑ Turn on the TV. While holding down the RESET button on the remote control, press the POWER button on the TV. (The TV will turn itself off, then back on again.) Release the RESET button.
No picture (screen not lit), no sound	❑ If your TV does not turn on, and a red light keeps flashing, your TV may need service. Call your local Sony Service Center. ❑ Make sure the power cord is plugged in. ❑ Push the power button on the front of the TV. ❑ Check to see if the TV / VIDEO setting is correct: when watching TV, set to TV. When watching connected equipment, set to VIDEO 1, 2, 3, or 4, as appropriate. ❑ Try another channel, it could be station trouble.
Remote control does not operate	❑ Batteries could be weak. Replace the batteries. ❑ Press TV (FUNCTION) when operating your TV. ❑ Make sure the TV's power cord is connected securely to the wall outlet. ❑ Locate the TV at least 3-4 feet away from fluorescent lights. ❑ Check the orientation of the batteries.
Dark, poor or no picture (screen lit), good sound	❑ Adjust the Picture setting in the Video menu (see page 36). ❑ Adjust the Brightness setting in the Video menu (see page 36). ❑ Check antenna / cable connections.
Good picture, no sound	❑ Press MUTING so that "MUTING" disappears from the screen (see page 4). ❑ Make sure Speaker is set to ON in the Audio menu (see page 38).
Cannot receive upper channels (UHF) when using an antenna	❑ Change Cable to OFF (see page 40). ❑ Use Auto Program in the Channel menu to add receivable channels that are not presently in the TV's memory (see page 40).
No color	❑ Adjust the Color settings in the Video menu (see page 36).
Only snow and noise appear on the screen	❑ Check the antenna / cable connections. ❑ Try another channel; it could be station trouble. ❑ Press ANT to change the input mode (see page 7).
Dotted lines or stripes	❑ Adjust the antenna. ❑ Move the TV away from noise sources such as cars, neon signs, or hair-dryers.
TV is fixed to one channel	❑ Use Auto Program in the Channel menu to add receivable channels that are not presently in the TV's memory (see page 40). ❑ Check your Channel Fix settings (see page 40).
Double images or ghosts	❑ Using a highly directional outdoor antenna or a cable may solve the problem.
Cannot operate menu	❑ If the item you want to choose appears in gray, you cannot select it.
Cannot receive any channels when using cable TV	❑ Use Auto Program in the Channel menu to add receivable channels that are not presently in the TV's memory (see page 40). ❑ Check your cable settings. ❑ Make sure Cable is set to ON in the Channel menu (see page 40).
Cannot gain enough volume when using a cable box	❑ Increase the volume of the cable box using the cable box's remote control. Then press TV (FUNCTION) and adjust the TV's volume.

Downloaded from www.Manualslib.com manuals search engine

Problem	Possible Remedies
Cannot receive channels	❏ Use Auto Program in the Channel menu to add receivable TV channels that are not presently in TV memory (see page 40).
Unable to select a channel	❏ Use Auto Program in the Channel menu to add receivable TV channels that are not presently in TV memory (see page 40).
Lost password	❏ In the password screen (see page 42), enter the following master password: 4357. The master password clears your previous password; it cannot be used to temporarily unblock channels.
Cannot change channels with the remote control	❏ If you are using the TV to change channels, be sure the TV FUNCTION button is selected. ❏ If you are using another device to change channels, be sure you have not inadvertently switched your TV from the channel 3 or 4 setting. Use the Channel Fix feature to "fix" the channel based on the hookup you used (see page 40). ❏ If you are using another device to change channels, be sure to press the green "FUNCTION" button for that device. For example, if you are using your VCR to change channels, be sure to press the VCR/DVD FUNCTION button.
Cannot cycle through the other video equipment connected to the TV	❏ Be sure the Video Label feature has not been set to "Skip" (see page 47).
There is a black box on the screen	❏ You have selected a text option in the Setup menu and no text is available. (See page 46 to reset Setup selections.) To turn off this feature, select OFF in the Caption Vision option. If you were trying to select closed captioning, select CC1 instead of TEXT 1-4.
The remote control will not work in PIP mode	❏ Press the TV FUNCTION button. You may have inadvertently pressed the VCR/DVD FUNCTION button, which changes the PIP buttons to VCR mode.
There is no window picture, or it is just static	❏ Be sure your window picture is set to a video source / channel that has a program airing. ❏ You may be tuned to a video input with nothing connected to it. Try cycling through your video inputs using the PIP TV/VIDEO button. ❏ PIP is not set to receive a signal from the AUX input. If you connected a VCR, DVD player or Satellite Receiver to the AUX input on the TV, it will not show in the small window picture.
I get the same program in the window picture as in the main picture	❏ Both may be set to the same channel. Try changing channels in either the main picture or the window picture. ❏ You may using a cable box for all your channels. If you must have a cable box to unscramble all channels, then you are limited to only one picture (because that is all that the cable box allows - one channel at a time). But if you need the cable box only part time (to unscramble premium channels), then you can use PIP when you are not using the cable box (when you use the CATV cable without going through the box).
I cannot get anything but TV in my window picture	❏ Be sure the video label has not been set to skip your video inputs. (See the Setup menu on page 47.)

If, after reading these operating instructions, you have additional questions related to the use of your Sony television, please call our Direct Response Center at 1-800-222-SONY (7669) (U.S. residents only) or (416) 499-SONY (7669) (Canadian residents only).

Downloaded from www.Manualslib.com manuals search engine

Specifications

All Models (General)

Picture Tube	FD Trinitron® tube	
Antenna	75 ohm external terminal for VHF/UHF	
Television System	NTSC, American TV Standard	
Channel Coverage		
VHF	2-13	
UHF	14-69	
CATV	1-125	
Power Requirements	120V, 60 Hz	
Number of Inputs/Outputs		
Video (IN)	3	1 Vp-p, 75 ohms unbalanced, sync negative
S Video (IN)	1	Y: 1 Vp-p, 75 ohms unbalanced, sync negative C: 0.286 Vp-p (Burst signal), 75 ohms
Audio (IN)	4	500 mVrms (100% modulation) Impedance: 47 kilohm
Variable/Fixed Audio (OUT)	1	More than 408 mVrms at the maximum volume setting (Variable) More than 408 mVrms (Fixed) Impedance (output): 2 kilohms
Component Video Input	1 (Y, P_B, P_R)	Y: 1.0 Vp-p, 75 ohms unbalanced, sync negative; P_B: 0.7 Vp-p, 75 ohms P_R: 0.7 Vp-p, 75 ohms

KV-36FS13, 36FS17

Supplied Accessories	
Supplied Accessories	
Remote Control	
KV-36FS13	RM-Y180
KV-36FS17	RM-Y181
AA (R6) Batteries	2 supplied for remote control
Optional Accessories	
AV Cable	VMC-810/820/830 HG
Audio Cable	RKC-515HG
Component Video Cable	VMC-10/30 HG
TV Stand	SU-36FD4
Visible Screen Size	36 in (911 mm) picture measured diagonally
Actual CRT Size	38 in (965.2 mm) picture measured diagonally
Speaker Output	10 W x 2
Dimensions (W x H x D)	910 x 791 x 650 mm (35 7/8 x 31 1/8 x 25 5/8 in)
Mass	100 kg (220 lbs)
Power Consumption	
In Use	200 W
In Standby	2 W

Downloaded from www.Manualslib.com manuals search engine

Index

16:9 (anamorphic or widescreen) 2, 48

A

Activating a PIP screen 31
Adding channels to the channel list 40
Adjusting the picture definition 37
ANT button 7
Aspect ratio, 16:9 47
Audio menu 35, 38
audio receiver, connecting 23
Auto Program (channel setup) 27, 40
Auto-SAP 35, 38
Auto setup 28

B

balance, adjusting 38
Basic menu 35, 48
bass, adjusting 38
batteries
  inserting in remote 3
bilingual audio 38
blocking programs. See ratings.
brightness, adjusting 36

C

cable
  box, connecting with VCR 17
  connecting 12-15
  setting ON / OFF 40
  with VCR, connecting 16
cable box, using with TV remote control 53
camcorder, connecting 26
Caption Vision 46, 48
CATV. see cable
Channel List
  Adding channels to 40
  Removing channels from 40
Channel menu 35
Channel Setup menu 40
Channel Skip / Add 41
channels
  creating labels 41
  setting up 27
closed caption modes 46
Code Set Button 4, 6, 50
color temperature, adjusting 36
color, adjusting 36
Connecting:
  Audio Receiver 24
  Cable or antenna 12-15
  Cable box 13-15
  Camcorder 27
  DVD player 25, 26
  Satellite receiver 21
  VCR 16-20
  VCR with satellite receiver 22
Contents of box 3
Controls and connections 10-11
Converter 14

D

Demo, menus 47
Display button 5, 7
Display, turning off 5, 7
DVD player
  using with TV remote control 52
  with A / V connectors, connecting 25
  with component video connectors, connecting 24

E

Enhanced picture resolution 47
Extended Data Service 46

F

Favorite Channel
  setting up 40
  using 30
Favorites button 30
features 2
Front Panel controls 10

(Continued on the next page)

Downloaded from www.Manualslib.com manuals search engine

G
Guide button 5, 7

H
Hookups 12-27
hue, adjusting 36

I
inputs, labeling 47

J
Jump button 4, 6

L
label
- channels 41
- video inputs 47

Languages, setting for closed captioning 46, 48
Locking programs 42

M
Manufacturer's Codes 49
MDP, using with TV remote control 53
Menu button 5, 7
menus
- Audio 35, 38
- Basic 35, 48
- Channel 35, 40
- Channel Setup 40
- Parent 35, 42
- Parental Control 42
- Setup 35, 46
- Timer 35, 45
- Video 35, 36

MTS 5, 38
Muting 4, 6

P
Parent menu 35, 42
parental control, described 2
password
- changing 42

picture contrast, adjusting 36
picture definition, adjusting 37
Picture in Picture (PIP), using 31
picture, adjusting 48
Picture Mode 4, 6
Picture size, adjusting in PIP 32
power cord, removing from holder 9
presetting channels 40
problems, troubleshooting 54-55

R
ratings, setting 42-43
ratings, viewing blocked programs 43, 44
Rear panel controls and connections 10-11
remote control
- described 4-7
- inserting batteries 3
- programming 50-51

Remote control, operating other components wtih
- VCR 52
- MDP 53
- Satellite receiver 53
- DVD 52
- Cable box 53

Removing channels from the channel list 40
Reset button 4, 6
resetting
- Audio options 38
- Timer options 45
- Video options 36

S
Safety ii, iii, iv
SAT/CABLE power button 4, 7
SAT/CABLE function button 5, 7
satellite receiver, using with TV remote control 53
Setting favorite channels 40
setting up channels 27
Setup menu 35, 46
sharpness, adjusting 36
Sleep timer/button 4, 6
speakers
- turning on/off 38
- using external speakers 38

specifications 56
surround sound 39

Downloaded from www.Manualslib.com manuals search engine

T

tape-to-tape editing 19
tilt, correcting 47
Time,
    set current 45
    set daylight savings 45
Timer menu 35, 45
Timer setting 45
treble, adjusting 38
troubleshooting 54-55
TV function button 5, 7
TV power button 4, 7
TV/VIDEO button 5, 7

V

VCR
    connecting two, for tape editing 19
    using with TV remote control 52
    with cable box, connecting 17
    with cable, connecting 16
    with satellite receiver, connecting 21
VCR/DVD power button 4, 7
VCR/DVD function button 5, 7
Velocity Modulation 2, 37
video inputs, labeling 47
Video menu 35, 36
Video Modes, selecting 36

W

Wega, described 2
widescreen 47
widescreen, described 2

Downloaded from www.Manualslib.com manuals search engine

Printed in U.S.A.

Downloaded from www.Manualslib.com manuals search engine

SONY

4-081-775-21

FD Trinitron

WEGA™

Operating Instructions

KV-32FV27 KV-36FV27

© 2001 by Sony Corporation

Downloaded from www.Manualslib.com manuals search engine

WARNING

To reduce the risk of fire or shock hazard, do not expose the TV to rain or moisture.

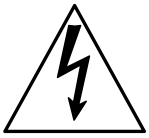

This symbol is intended to alert the user to the presence of uninsulated "dangerous voltage" within the product's enclosure that may be of sufficient magnitude to constitute a risk of electric shock to persons.

This symbol is intended to alert the user to the presence of important operating and maintenance (servicing) instructions in the literature accompanying the appliance.

CAUTION

TO PREVENT ELECTRIC SHOCK, MATCH WIDE BLADE OF PLUG TO WIDE SLOT, FULLY INSERT.

CAUTION

When using TV games, computers, and similar products with your TV, keep the brightness and contrast functions at low settings. If a fixed (non-moving) pattern is left on the screen for long periods of time at a high brightness or contrast setting, the image can be permanently imprinted onto the screen. Continuously watching the same program can cause the imprint of station logos onto the TV screen. These types of imprints are not covered by your warranty because they are the result of misuse.

Note on Caption Vision

This television receiver provides display of television closed captioning in accordance with §15.119 of the FCC rules.

Note on Cleaning the TV

Clean the TV with a soft dry cloth. Never use strong solvents such as thinner or benzine, which might damage the finish of the cabinet.

Note to CATV System Installer

This reminder is provided to call the CATV system installer's attention to Article 820-40 of the NEC that provides guidelines for proper grounding and, in particular, specifies that the cable ground shall be connected to the grounding system of the building, as close to the point of cable entry as practical.

Use of this television receiver for other than private viewing of programs broadcast on UHF or VHF or transmitted by cable companies for the use of the general public may require authorization from the broadcaster / cable company and / or program owner.

NOTIFICATION

This equipment has been tested and found to comply with the limits for a Class B digital device pursuant to Part 15 of the FCC Rules. These limits are designed to provide reasonable protection against harmful interference in a residential installation. This equipment generates, uses, and can radiate radio frequency energy and, if not installed and used in accordance with the instructions, may cause harmful interference with radio communications. However, there is no guarantee that interference will not occur in a particular installation. If this equipment does cause harmful interference to radio or television reception, which can be determined by turning the equipment off and on, the user is encouraged to try to correct the interference by one or more of the following measures:

- ❑ Reorient or relocate the receiving antennas.
- ❑ Increase the separation between the equipment and receiver.
- ❑ Connect the equipment into an outlet on a circuit different from that to which the receiver is connected.
- ❑ Consult the dealer or an experienced radio / TV technician for help.

  You are cautioned that any changes or modifications not expressly approved in this manual could void your authority to operate this equipment.

Safety

- ❑ Operate the TV only on 120 V AC.
- ❑ The plug is designed, for safety purposes, to fit into the wall outlet only one way. If you are unable to insert the plug fully into the outlet, contact your dealer.
- ❑ If any liquid or solid object should fall inside the cabinet, unplug the TV immediately and have it checked by qualified service personnel before operating it further.

Installing

- ❑ To prevent internal heat buildup, do not block the ventilation openings.
- ❑ Do not install the TV in a hot or humid place, or in a place subject to excessive dust or mechanical vibration.
- ❑ The AC power cord is attached to the rear of the TV with hooks. Do not attempt to remove the cord from these hooks. Doing so could cause damage to the TV

As an ENERGY STAR® Partner, Sony has determined that this product or product models meets the ENERGY STAR® guidelines for energy efficiency.

ENERGY STAR® is a U.S. registered mark.

(●)® SRS Sound Retrieval System

The (●) SRS (SOUND RETRIEVAL SYSTEM) is manufactured by Sony Corporation under license from SRS Labs, Inc. It is covered by U.S. Patent No. 4,748,669. Other U.S. and foreign patents pending. The word "SRS" and the SRS symbol (●) are registered trademarks of SRS Labs, Inc.

Licensed by BBE Sound, Inc. under USP 4638258.4482866. BBE and BBE symbol are trademarks of BBE Sound, Inc.

FD Trinitron and the Wega logo are trademarks of Sony Corporation.

Owner's Record

The model and serial numbers are provided on the front of this instruction manual and at the rear of the TV. Refer to them whenever you call upon your Sony dealer regarding this product.

About this Manual

This manual is for models KV-32FV27 and KV-36FV27. The menu and illustrations shown are for model KV-36FV27 to show the maximum features available. Differences in operation will be indicated in the text, for example, "For KV-36FV27 only."

Downloaded from www.Manualslib.com manuals search engine

Important Safeguards

For your protection, please read these instructions completely, and keep this manual for future reference.

Carefully observe and comply with all warnings, cautions and instructions placed on the set or described in the operating instructions or service manual.

WARNING

To guard against injury, the following basic safety precautions should be observed in the installation, use and servicing of the set.

Use

Power Sources

This set should be operated only from the type of power source indicated on the serial / model plate. If you are not sure of the type of electrical power supplied to your home, consult your dealer or local power company. For those sets designed to operate from battery power, refer to the operating instructions.

Grounding or Polarization

This set is equipped with a polarized AC power cord plug (a plug having one blade wider than the other), or with a three-wire grounding type plug (a plug having a third pin for grounding).Follow the instructions below:

For the set with a polarized AC power cord plug

This plug will fit into the power outlet only one way. This is a safety feature. If you are unable to insert the plug fully into the outlet, try reversing the plug. If the plug still fails to fit, contact your electrician to have a suitable outlet installed. Do not defeat the safety purpose of the polarized plug by forcing it in.

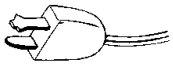

Alternate Warning

For the set with a three-wire grounding type AC plug

This plug will only fit into a grounding-type power outlet. This is a safety feature. If you are unable to insert the plug into the outlet, contact your electrician to have a suitable outlet installed. Do not defeat the safety purpose of the grounding plug.

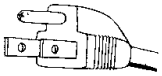

Overloading

Do not overload wall outlets, extension cords or convenience receptacles beyond their capacity, since this can result in fire or electric shock.

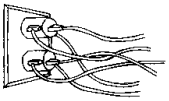

Always turn the set off when it is not being used. When the set is left unattended and unused for long periods of time, unplug it from the wall outlet as a precaution against the possibility of an internal malfunction that could create a fire hazard.

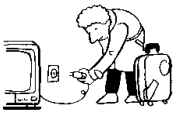

If a snapping or popping sound from a TV set is continuous or frequent while the TV is operating, unplug the TV and consult your dealer or service technician. It is normal for some TV sets to make occasional snapping or popping sounds, particularly when being turned on or off.

Object and Liquid Entry

Never push objects of any kind into the set through the cabinet slots as they may touch dangerous voltage points or short out parts that could result in a fire or electric shock. Never spill liquid of any kind on the set.

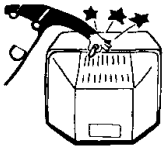

Cleaning

Unplug the set from the wall outlet before cleaning or polishing it. Do not use liquid cleaners or aerosol cleaners. Use a cloth lightly dampened with water for cleaning the exterior of the set.

Installation

Attachments

Do not use attachments not recommended by the manufacturer, as they may cause hazards.

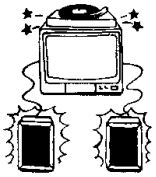

Water and Moisture

Do not use power-line operated sets near water — for example, near a bathtub, washbowl, kitchen sink, or laundry tub, in a wet basement, or near a swimming pool, etc.

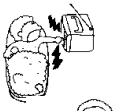

Accessories

Do not place the set on an unstable cart, stand, table or shelf. The set may fall, causing serious injury to a child or an adult and serious damage to the set. Use only a cart or stand recommended by the manufacturer for the specific model of TV. An appliance and cart combination should be moved with care. Quick stops, excessive force, and uneven surfaces may cause the appliance and cart combination to overturn.

Ventilation

The slots and openings in the cabinet and in the back or bottom are provided for necessary ventilation. To ensure reliable operation of the set, and to protect it from overheating, these slots and openings must never be blocked or covered.

- ❑ Never cover the slots and openings with a cloth or other materials.

- ❑ Never block the slots and openings by placing the set on a bed, sofa, rug or other similar surface.

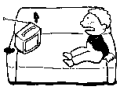

- ❑ Never place the set in a confined space, such as a bookcase or built-in cabinet, unless proper ventilation is provided.

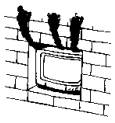

- ❑ Do not place the set near or over a radiator or heat register, or where it is exposed to direct sunlight.

Downloaded from www.Manualslib.com manuals search engine

Power-Cord Protection

Do not allow anything to rest on or roll over the power cord, and do not place the set where the power cord is subject to wear or abuse.

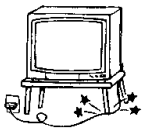

Antennas

Outdoor Antenna Grounding

If an outdoor antenna is installed, follow the precautions below. An outdoor antenna system should not be located in the vicinity of overhead power lines or other electric light or power circuits, or where it can come in contact with such power lines or circuits.

WHEN INSTALLING AN OUTDOOR ANTENNA SYSTEM, EXTREME CARE SHOULD BE TAKEN TO KEEP FROM CONTACTING SUCH POWER LINES OR CIRCUITS AS CONTACT WITH THEM IS ALMOST INVARIABLY FATAL.

Be sure the antenna system is grounded so as to provide some protection against voltage surges and built-up static charges. Section 810 of the National Electrical Code (NEC) in USA and Section 54 of the Canadian Electrical Code in Canada provides information with respect to proper grounding of the mast and supporting structure, grounding of the lead-in wire to an antenna discharge unit, size of grounding conductors, location of antenna discharge unit, connection to grounding electrodes, and requirements for the grounding electrode.

Antenna Grounding According to the NEC

Refer to section 54-300 of Canadian Electrical Code for Antenna Grounding.

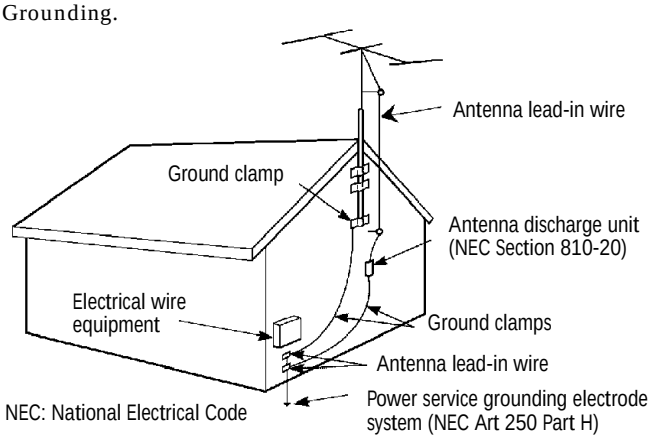

Lightning

For added protection for this television receiver during a lightning storm, or when it is left unattended and unused for long periods of time, unplug it from the wall outlet and disconnect the antenna. This will prevent damage to the receiver due to lightning and power-line surges.

Service

Damage Requiring Service

Unplug the set from the wall outlet and refer servicing to qualified service personnel under the following conditions:

- ❑ When the power cord or plug is damaged or frayed.

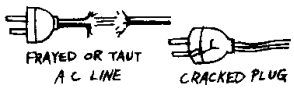

- ❑ If liquid has been spilled into the set.

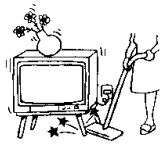

- ❑ If the set has been exposed to rain or water.

- ❑ If the set has been subject to excessive shock by being dropped, or the cabinet has been damaged.

- ❑ If the set does not operate normally when following the operating instructions. Adjust only those controls that are specified in the operating instructions. Improper adjustment of other controls may result in damage and will often require extensive work by a qualified technician to restore the set to normal operation.

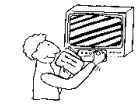

- ❑ When the set exhibits a distinct change in performance, it indicates a need for service.

Servicing

Do not attempt to service the set yourself since opening the cabinet may expose you to dangerous voltage or other hazards. Refer all servicing to qualified service personnel.

Replacement Parts

When replacement parts are required, be sure the service technician certifies in writing that he has used replacement parts specified by the manufacturer that have the same characteristics as the original parts.

Unauthorized substitutions may result in fire, electric shock or other hazards.

Safety Check

Upon completion of any service or repairs to the set, ask the service technician to perform routine safety checks (as specified by the manufacturer) to determine that the set is in safe operating condition, and to so certify. When the set reaches the end of its useful life, improper disposal could result in a picture tube implosion. Ask a qualified service technician to dispose of the set.

Downloaded from www.Manualslib.com manuals search engine

Contents

Introducing the FD Trinitron Wega

Overview 1
Presenting the FD Trinitron Wega 2
Package Contents 3
Using the Remote Control 3

Installing the TV

Overview 7
TV Controls and Connectors 8
Basic Connections (Connecting a Cable or Antenna) 10
Connecting a VCR and Cable 14
Connecting a VCR and Cable Box 15
Connecting Two VCRs for Tape Editing 18
Connecting a Satellite Receiver 19
Connecting a Satellite Receiver with a VCR 20
Connecting an Audio Receiver 22
Connecting a DVD Player with Component Video Connectors 23
Connecting a DVD Player with A/V Connectors 24
Connecting a Camcorder 25
Using the CONTROL S Feature 26
Setting Up the TV Automatically 27

Using the Features

Overview 29
Using Favorite Channels 30
Using Picture in Picture (PIP) 31
Using Wireless Headphones 34

Using the Menus

Overview 37
Using the Video Menu 38
Using the Audio Menu 40
Using the Channel Menu 42
Using the Parent Menu 44
Using the Timer Menu 47
Using the Setup Menu 48
Using the Basic Menu 50

Other Information

Overview 51
Programming the Remote Control 52
Operating Other Components with Your TV Remote Control 54
Troubleshooting 56
Specifications 58
Index 61

Downloaded from www.Manualslib.com manuals search engine

Introducing the FD Trinitron Wega

Overview

This chapter defines the contents of your Wega TV and provides an overview of how to set up and use basic features.

Topic	Page
Presenting the FD Trinitron Wega	2
Package Contents	3
Using the Remote Control	3

Downloaded from www.Manualslib.com manuals search engine

Presenting the FD Trinitron Wega

The FD Trinitron Wega (pronounced VAY-GAH) is characterized by outstanding contrast, uncompromising accuracy, and corner-to-corner detail.

You'll recognize the superiority of Wega technology almost immediately. The first thing you probably will notice is minimal glare from the flat picture tube. This flat-screen technology improves picture detail without distortion, unlike conventional curved screens. The FD Trinitron delivers outstanding image detail not only at the screen center, but also at the corners — so you can enjoy a bright, clear picture from any location in a room.

Features

Some of the features that you will enjoy with your new TV include:

- **16:9 Enhancement:** Vertical Compression technology that maximizes picture resolution on "anamorphic" or "enhanced for widescreen" sources, including selected DVDs.
- **Velocity Modulation:** Vertical line enhancement that sharpens picture definition.
- **Steady Sound:** Equalizes volume levels so there is consistent output between programs and commercials.
- **Parental Control:** V-Chip technology allows parents to block unsuitable programming for younger viewers.
- **Component Video Inputs:** Offers the best video quality for DVD player connections.
- **S-VIDEO Inputs:** Provides a high-quality image for connected equipment.
- **Dual Tuner Picture in Picture (PIP):** Allows you to watch two programs at once.
- **Favorite Channel Preview:** Preview up to eight favorite channels without leaving the current channel.
- **Wireless Infrared Headphones:** Enjoy listening to programs without disturbing anyone else.

Downloaded from www.Manualslib.com manuals search engine

Package Contents

Along with your new Trinitron TV, the packing box contains a remote control, a pair of wireless headphones, and three AA batteries (two for the remote control, one for the headphones). These items are all you need to set it up and operate the TV in its basic configuration.

Most peripherals come with the necessary cables to connect them. If you want to set up special configurations, you may need to buy extra cables or connectors. It is best to ensure that you have all needed materials on hand before beginning a special-connection project.

Using the Remote Control

The remote control is the primary mechanism for controlling your TV. Handle the remote control with care; avoid dropping it, getting it wet, placing it in direct sunlight, near a heater, or where the humidity is high.

Inserting Batteries

Insert two size AA (R6) batteries (supplied) by matching the + and – on the batteries to the diagram inside the battery compartment.

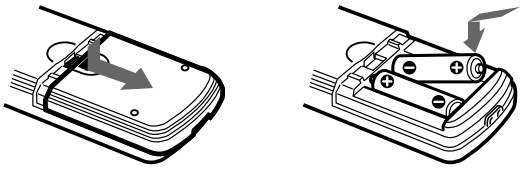

Remove the batteries to avoid damage from possible battery leakage whenever you anticipate that the remote control will not be used for an extended period.

Downloaded from www.Manualslib.com manuals search engine

Button Descriptions

The POWER button on the remote control (no. 13 in the illustration below) activates both the remote control and the TV.

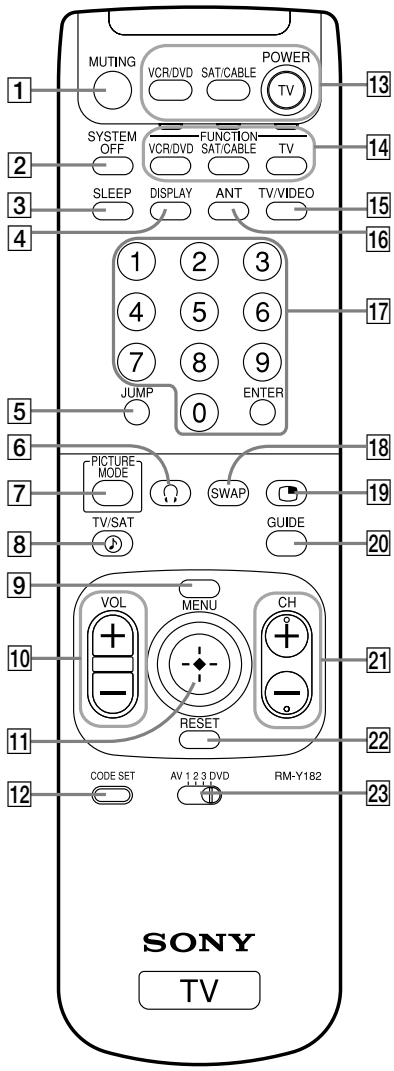

RM-Y182

To scan rapidly through the channels, press and hold down the CH+ or CH- button.

Outside Panel

	Button	Description
1	MUTING	Press to mute the sound. Press again or press VOL + to restore the sound.
2	SYSTEM OFF	Powers off all Sony equipment at once. (This feature may not work with older Sony equipment.)
3	SLEEP	Press repeatedly until the TV displays the time in minutes (15, 30, 45, 60, or 90) that you want the TV to remain on before shutting off automatically. Cancel by pressing until SLEEP OFF appears. While Sleep feature is set, press once to view remaining time
4	DISPLAY	Press once to display the current time and channel label (if set) and channel number. Press again to turn Display off. See page 47 for details on setting the time.
5	JUMP	Press to jump back and forth between two channels. The TV alternates between the current channel and the last channel that was selected.
6		Turns the headphones on / off.
7	PICTURE MODE	Press repeatedly to step through the available video picture modes: Vivid, Standard, Pro, Movie. Also available in the Video menu. For details, see “Selecting Video Options” on page 38.
8	TV/SAT	Switches between the TV and SAT (satellite) inputs when in SAT FUNCTION mode.
		Provides quick access for changing available audio settings. For details, see “Selecting Audio Options” on page 38.
9	MENU	Press to display the TV on-screen menu. Press again to exit from the menus.
10	VOL +/-	Adjusts the volume.
11		Joystick allows for movement of the on-screen cursor. Pressing down on the center of the joystick selects the item.
12	CODE SET	Used for programming the remote control to operate non-Sony video equipment. For details, see “Programming the Remote Control” on page 52.
13	POWER buttons (GREEN)	Turn on and off the TV and other audio / video equipment you have programmed into the remote control. For instructions, see “Programming the Remote Control” on page 52.
14	FUNCTION buttons (WHITE)	Select the equipment (TV, VCR / DVD, SAT / CABLE) that you want to operate. The indicator lights up momentarily when pushed to show which device the remote control is operating.

Downloaded from www.Manualslib.com manuals search engine

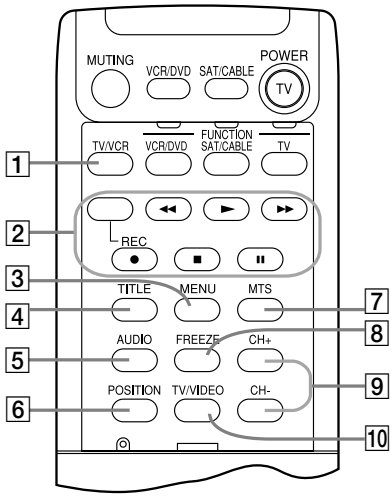

	Button	Description
15	TV/VIDEO	Cycles through the video equipment connected to the TV's video inputs: TV, VIDEO 1, VIDEO 2, VIDEO 3, VIDEO 4, VIDEO 5, VIDEO 6.
16	ANT	Changes between the VHF/UHF input to the AUX input.
17	0 – 9 and ENTER	Press 0 - 9 to select a channel, the channel changes after 2 seconds. Press ENTER to select immediately.
18	SWAP	Switches the position of the main picture with the window picture.
19		Turns on/off PIP. For details, see "Using Picture in Picture (PIP)" on page 29.
20	GUIDE	Displays the program guide of your satellite antenna.
21	CH +/-	Scan through channels.
22	RESET	Press when in a menu to reset the settings to the factory defaults.
23	AV 1 2 3 DVD	Use to switch control for connected video equipment. You can program one video source for each switch position. For details, see "Programming the Remote Control" on page 52.

Inside Panel

1	TV/VCR	Switch between TV and VCR mode. If you have a non-Sony VCR, you will need to program the remote control to recognize your VCR. For details, see "Programming the Remote Control" on page 52.
2	◄◄	Rewind
	REC	Record (press the blank button – above, left – at the same time)
	►►	Fast-forward
	►	Play
	■	Stop
	❚❚	Pause (Press again to resume normal playback)
3	MENU	Displays the DVD's menu.
4	TITLE	Displays the DVD's Title menu.
5	AUDIO	Alternates sound between the main picture and the window picture.
6	POSITION	Moves the location of the PIP window picture.
7	MTS	Cycles through the Multi-channel TV Sound (MTS) options: Stereo and Mono.
8	FREEZE	Freezes the window picture. Press again to restore the picture.
9	CH +/–	Changes the channel in the PIP window picture.
10	TV/VIDEO	The PIP window picture, cycles through the video equipment connected to your TV's video inputs: TV, VIDEO 1, VIDEO 2, VIDEO 3, VIDEO 4. This allows you to select different sources for the PIP display.

Downloaded from www.Manualslib.com manuals search engine

Installing the TV

Overview

This chapter includes illustrated instructions for setting up your TV.

Topic	Page
TV Controls and Connectors	8
Basic Connections (Connecting a Cable or Antenna)	10
Connecting a VCR and Cable	14
Connecting a VCR and Cable Box	15
Connecting Two VCRs for Tape Editing	18
Connecting a Satellite Receiver	19
Connecting a Satellite Receiver with a VCR	20
Connecting an Audio Receiver	22
Connecting a DVD Player with Component Video Connectors	23
Connecting a DVD Player with A/V Connectors	24
Connecting a Camcorder	25
Using the CONTROL S Feature	26
Setting Up the TV Automatically	27

Note About the AC Power Cord

The AC power cord is attached to the rear of the TV with hooks. Use caution when removing the AC plug from its holder. Gently slide the cord in the upward direction without removing the cord from the two lower hooks.

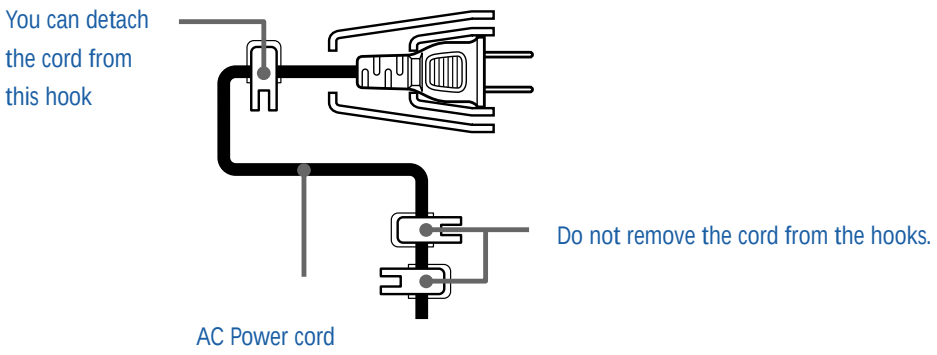

Downloaded from www.Manualslib.com manuals search engine

TV Controls and Connectors

Front Panel Menu Controls

The front panel menu controls allow access to the on-screen menus without the use of a remote control. Pressing the MENU button brings up the on-screen menus. The arrow buttons (↑↓) move the on-screen cursor in the menus and the (⊹) button selects the menu item.

TV Rear Panel

Model KV-36FV27

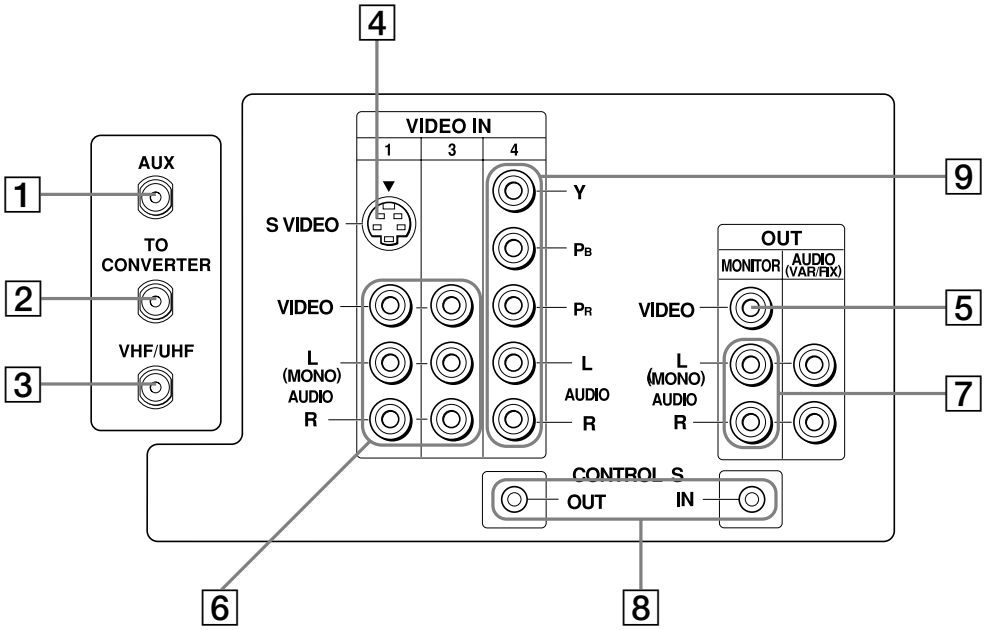

Back Panel Descriptions

Connection	Description
1 AUX	Allows you to view local and cable channels if your cable provider does not feature local channels. You can switch between local and cable channels easily by pressing ANT on the remote control. Devices connected to the AUX input cannot be viewed in PIP.
2 TO CONVERTER	This is a VHF / UHF out jack that lets you set up your TV to switch between scrambled channels (through a cable box) and normal cable channels (CATV). Use this jack instead of a splitter to get better picture quality when needing to switch between scrambled and unscrambled cable channels.
3 VHF/UHF	Connects to your VHF / UHF antenna or cable.

Downloaded from www.Manualslib.com manuals search engine

Connection	Description
4 S VIDEO	Connects to the S VIDEO OUT jack of your VCR or other S VIDEO-equipped video component. Provides better picture quality than the VHF / UHF jacks or the Video IN jack.
5 MONITOR OUT	Lets you record the program you are watching to a VCR. When two VCRs are connected (see page 17), you can use your TV as a monitor for tape-to-tape editing.
6 AUDIO (L/R)/ VIDEO	Connects to the audio and video OUT jacks on your VCR or other video component. A third video input (VIDEO 2) is located on the front panel of the TV. The Audio and Video IN jacks provide better picture quality than the VHF / UHF jack.
7 AUDIO OUT (VAR/FIX) L (MONO)/R	Connects to the left and right audio inputs of your audio or video component. You can use these outputs to listen to your TV's audio through your stereo system.
8 CONTROL S IN/OUT	Allows the TV to receive (IN) and send (OUT) remote control signals (via wire) to other Sony infrared-controlled audio or video components.
9 Y, PB, PR, L, R	Connects to your DVD player's or Digital Set-top box's component video (Y, PB, PR) and audio (L / R) jacks.

Downloaded from www.Manualslib.com manuals search engine

Basic Connections (Connecting a Cable or Antenna)

Connecting Directly to Cable or to an Antenna

The connection you choose depends on the cable found in your home.

Newer homes usually have standard coaxial cable:

VHF Only or VHF/UHF or Cable

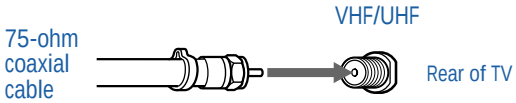

Older homes may have 300-ohm, twin-lead cable:

VHF Only or UHF Only or VHF/UHF

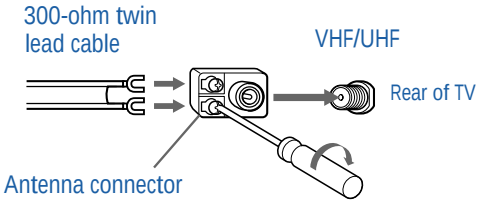

Other homes may have both:

VHF and UHF

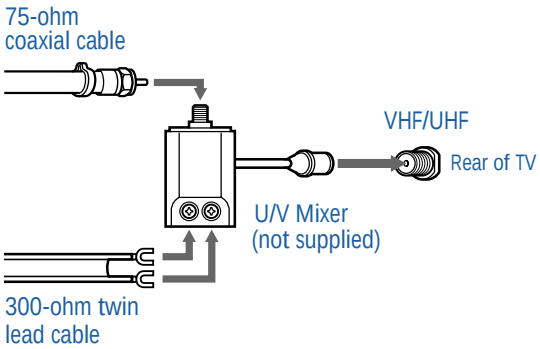

Downloaded from www.Manualslib.com manuals search engine

Cable and Antenna

If your cable provider does not feature local channels, you may find this set-up convenient.

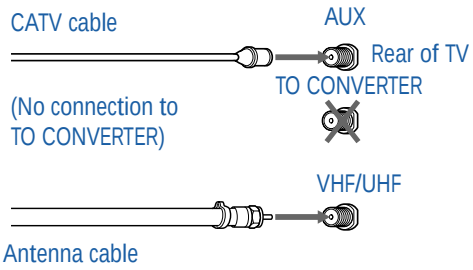

To receive channels using an antenna, instead of using the CATV cable

1. Select antenna mode by pressing the ANT button on the remote control. (This is a toggle: pressing the button once selects antenna mode; pressing the button again selects cable mode.)
2. Turn the Cable to OFF (see page 42).
3. Perform the Auto Program function (see page 42).

Basic Cable Box Connections

Cable Box and Cable

This is the preferred basic cable TV hookup to use if your cable TV company scrambles some channels, but not all of them (pay channels vs. regular cable channels), and you need to use a cable box.

With this setup you can:

- Use the TV remote control to change channels on your cable box when the signal is scrambled.
- Use the TV remote control to change channels using your TV when the signal is not scrambled. (Your TV's tuner provides a better signal than the cable box.)
- Use the PIP feature normally with the CATV input.
- Use the PIP feature partially with the cable box. (When you switch the TV input to AUX — to use the cable box — the scrambled picture will display only in the main window. If you turn on the PIP, you will be able to see any of the regular channels in the PIP window, but you cannot SWAP the pictures between the main and PIP windows.)

(Continued on the next page)

Downloaded from www.Manualslib.com manuals search engine

(Continued from the previous page)

1. Connect the Cable TV cable to the TV's VHF/UHF jack.
2. Using a coaxial cable, connect the TV's TO CONVERTER jack to the cable box's IN jack. The TV's internal converter allows you to switch between unscrambled signals coming straight into the TV and scrambled signals coming in through the cable box, eliminating the need for an external splitter.
3. Using a coaxial cable, connect the cable box's OUT jack to the TV's AUX jack.

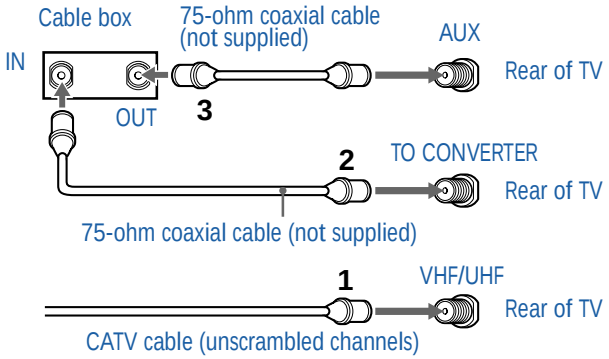

To switch between channels from cable box and channels from regular cable

- Press the ANT button on the TV remote control. (This is a toggle: pressing the button once selects the cable box; pressing the button again selects regular cable.)

To use the cable box

- Have your TV tuner set to channel 3 or 4 (as appropriate) and then use the cable box to switch channels.

To use the TV remote control to switch channels on the cable box

- Program the remote control as necessary. (See "Programming the Remote Control" on page 52.) Then use the remote control to switch cable box channels.

To use the TV remote control to switch channels on the VCR

- Program the remote control as necessary. (By default, the reomte control is set for a Sony VCR; to change to another brand see "Programming the Remote Control" on page 52.) Then use the VCR buttons on the remote control to switch channels on the VCR.

To prevent the accidental switching of TV channels

- When using the cable box, you need your TV to stay on a required channel (usually channel 3 or 4). You can use the TV's Channel Fix feature to lock in a specific channel. The Channel Fix feature is under the Channel menu. For details, see "Using the Channel Menu" on page 42.

Downloaded from www.Manualslib.com manuals search engine

Cable Box only

Use this hookup if:

- ❑ You subscribe to a cable TV system that scrambles or encodes all signals, requiring a cable box to view all channels, and
- ❑ You do not intend to hook up any other audio or video equipment to your TV.

When all channels are routed through your cable box, only one unscrambled signal is sent to the TV, so you cannot use the PIP feature. If some of your channels are scrambled, but others are not, consider using the hookup “Cable Box and Cable” on page 11 instead.

1. Connect the coaxial connector from your cable service to the cable box’s IN jack.
2. Using a coaxial cable, connect the cable box’s OUT jack to the TV’s VHF / UHF jack.

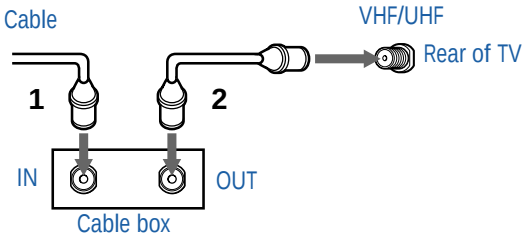

Downloaded from www.Manualslib.com manuals search engine

Connecting a VCR and Cable

Use this hookup if you subscribe to a cable TV (CATV) system that does not require a cable box.

1. Connect the CATV cable to the VCR's IN jack.
2. Using a coaxial cable, connect the VCR's OUT jack to the TV's VHF/UHF jack.
3. Using an A/V cable, connect the VCR's Audio and Video OUT jacks to the TV's Audio and Video IN jacks.

> If the VCR you are connecting has an S VIDEO jack, you can use an S VIDEO cable for improved picture quality (compared to a combination audio/video cable). Because S VIDEO cables carry only the video signal, you will need audio cables for sound.

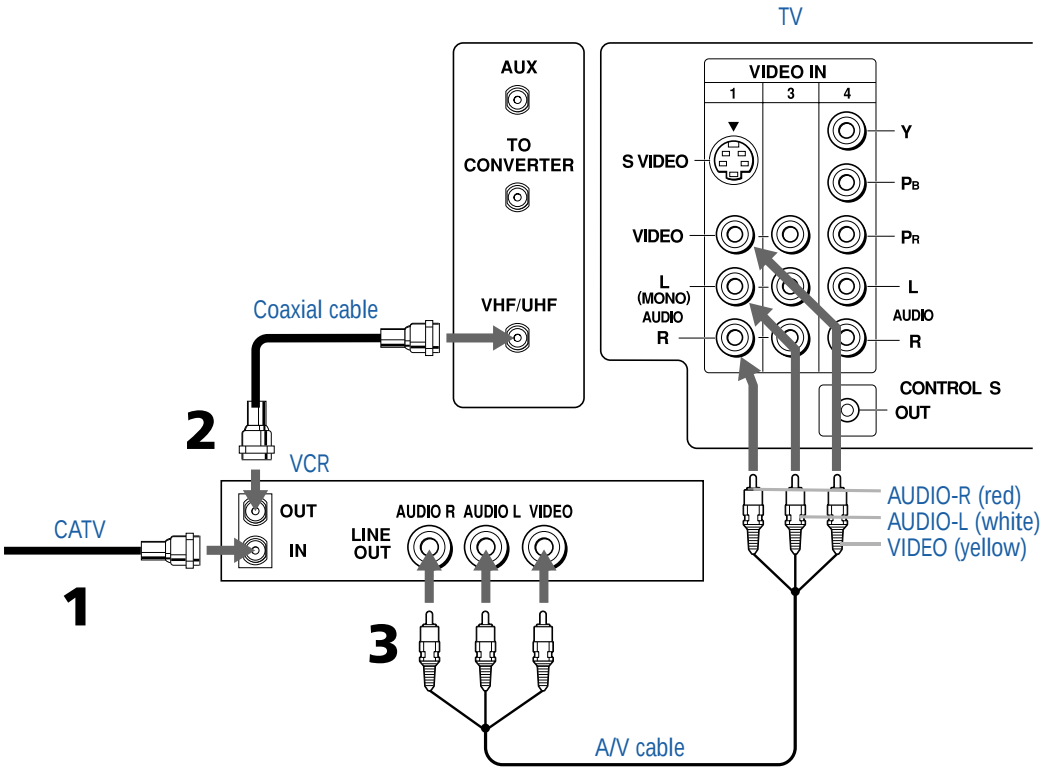

Downloaded from www.Manualslib.com manuals search engine

Connecting a VCR and Cable Box

Use this hookup if:

- Your cable TV company scrambles some channels, but not all of them (pay channels vs. regular cable channels) and you therefore need to use a cable box, and
- You want to use the PIP feature.

With this setup you can:

- Use the TV remote control to change cable box channels when the signal is scrambled.
- Use the TV remote control to change TV channels when the signal is not scrambled. (Your TV's tuner provides a better signal than the cable box.)
- Use the PIP feature.
- Record both regular CATV and scrambled channels.

To connect a cable box and a VCR, you will need:

- A small, inexpensive device known as a splitter.
- Three coaxial cables.
- Either a combination audio/video cable, or an S VIDEO cable and audio cables.

1. Connect the CATV cable to the single (input) jack of the splitter.
2. Use a coaxial cable to connect one of the two output jacks of the splitter to the TV's VHF/UHF jack.
3. Use a coaxial cable to connect the other output jack of the splitter to the input jack of the cable box.
4. Use a coaxial cable to connect the output jack of the cable box to the input jack of the VCR.
5. Use the video line (yellow) of a combination audio/video (A/V) cable to connect the video output jack of the VCR to the video input jack of the TV.

> If the VCR has an S VIDEO jack, you can use an S VIDEO cable to improve picture quality, replace the yellow video cable of the combination A/V cable with the S VIDEO cable. (Do not connect both types of cable at the same time.) You will still need audio cables for sound.

Connect the left (white) and right (red) audio output channels of the VCR to the respective input channels on the TV.

(Continued on the next page)

Downloaded from www.Manualslib.com manuals search engine

(Continued from the previous page)

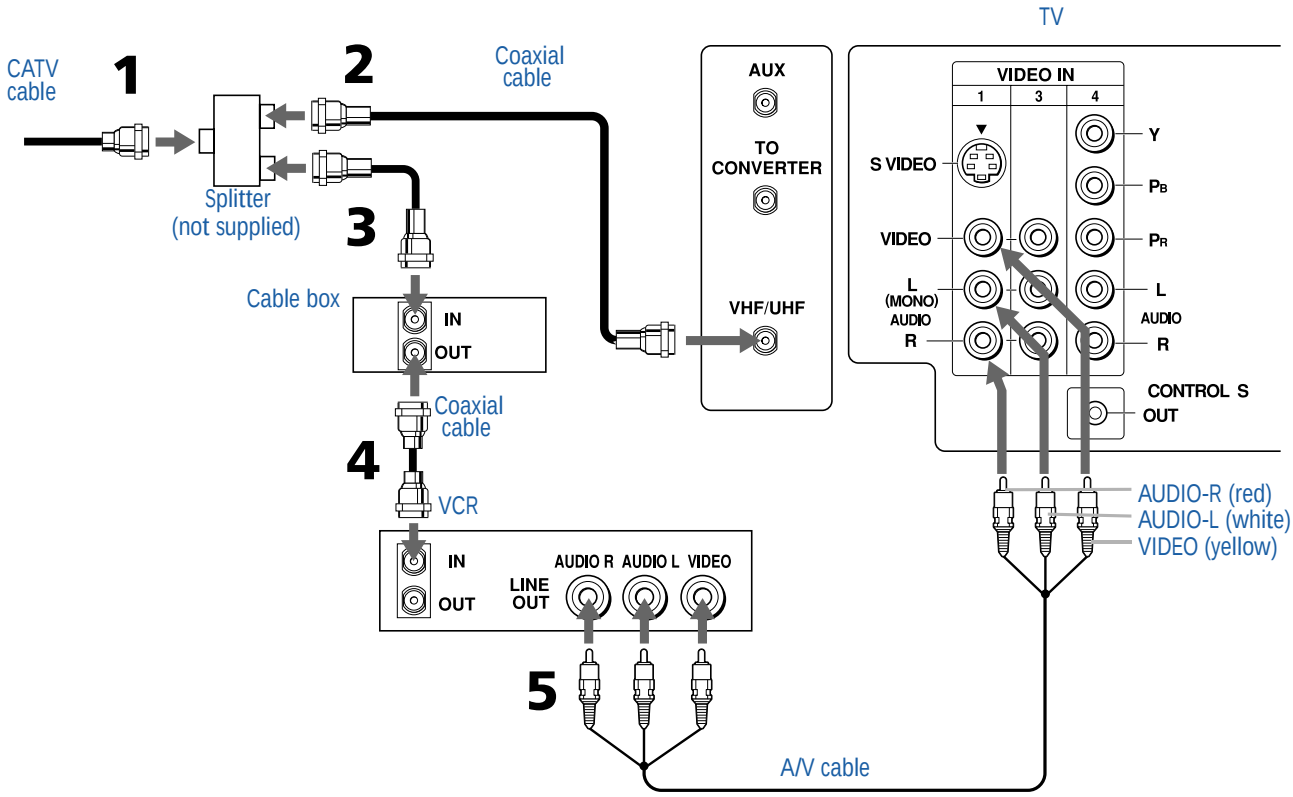

To view cable box channels

❑ Turn on the VCR and set it to the channel the cable box uses (channel 3 or 4). Set the TV to VIDEO 1. Use the cable box to switch channels.

To use the TV remote control to switch channels on the cable box

❑ Program the remote control as necessary. (See “Programming the Remote Control” on page 52.) Then use the remote control to switch cable box channels.

To use the TV remote control to switch channels on the VCR

❑ Program the remote control as necessary. (By default, the remote control is set for a Sony VCR; to change to another brand see “Programming the Remote Control” on page 52.) Then use the VCR buttons on the remote control to switch VCR channels.

Downloaded from www.Manualslib.com manuals search engine

To use PIP with the Cable Box

❑ Turn on the cable box and VCR. Use the remote control's TV/VIDEO (yellow) button to set the PIP output to VIDEO 1. Change the PIP channel via the cable box. (The cable box's tuner is used as the PIP video source; if you do not turn on the cable box, the PIP will not work.)

✍ This system is needed because the cable box unscrambles only one channel at a time (unlike regular cable, which makes all channels available concurrently).

Downloaded from www.Manualslib.com manuals search engine

Connecting Two VCRs for Tape Editing

If you connect two VCR's together, so you can record from one to the other, you may want to monitor the recording process. You can connect the recording VCR into your TV and then view what is being recorded. The procedure below shows you how to do this.

1. Using an A/V cable, connect the playback VCR's Audio and Video OUT jacks to the recording VCR's Audio and Video IN jacks.
2. Using an A/V cable, connect the recording VCR's Audio and Video OUT jacks to the TV's Audio and Video IN jacks.

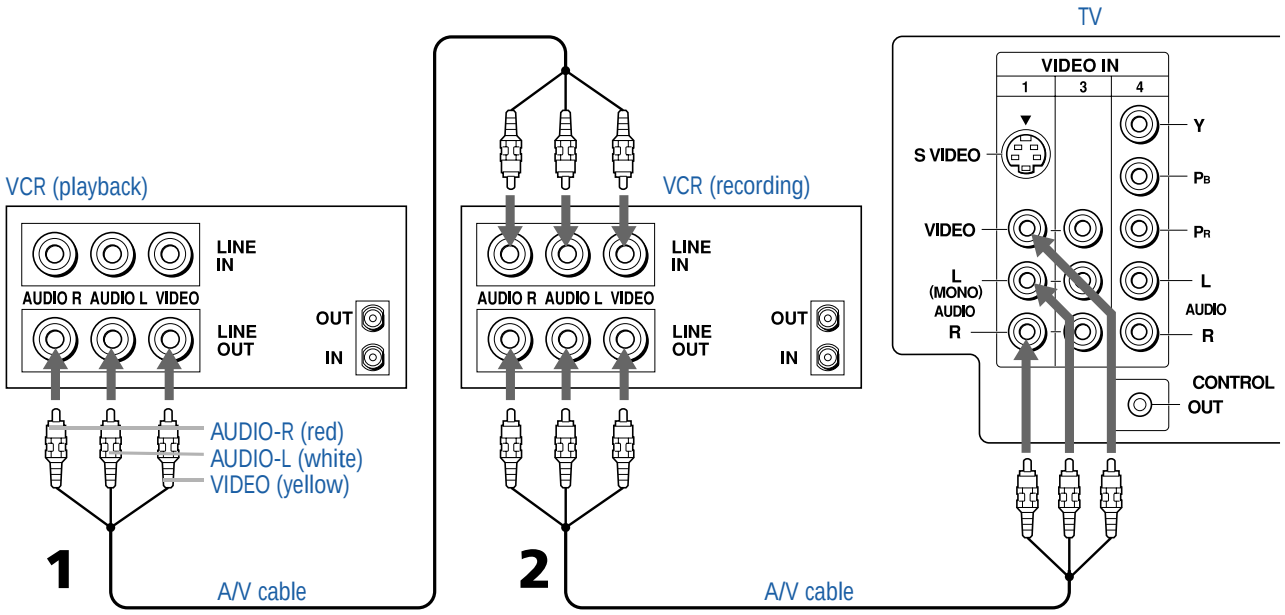

To change the video input of the VCR.

- ❑ See your VCR's user's guide for instructions.

To view what is being recorded

- ❑ Use the remote control to set the TV to the video input that the recording VCR is connected to. (VIDEO 1 in the illustration above.)

If the VCRs you are connecting have S VIDEO jacks, you can use S VIDEO cables to improve picture quality, replace the yellow video cable of the combination A/V cable with the S VIDEO cable. (Do not connect both types of cable at the same time.) You will still need audio cables for sound.

Downloaded from www.Manualslib.com manuals search engine

Connecting a Satellite Receiver

1. Connect the satellite antenna cable to the satellite receiver's SATELLITE IN jack.
2. Using an A/V cable, connect the satellite receiver's Audio and Video OUT jacks to the TV's Audio and Video IN jacks.
3. Connect a coaxial cable from your cable or antenna to the TV's VHF/UHF jack.

If the satellite receiver has an S VIDEO jack, you can use an S VIDEO cable to improve picture quality, replace the yellow video cable of the combination A/V cable with the S VIDEO cable. (Do not connect both types of cable at the same time.) You will still need audio cables for sound.

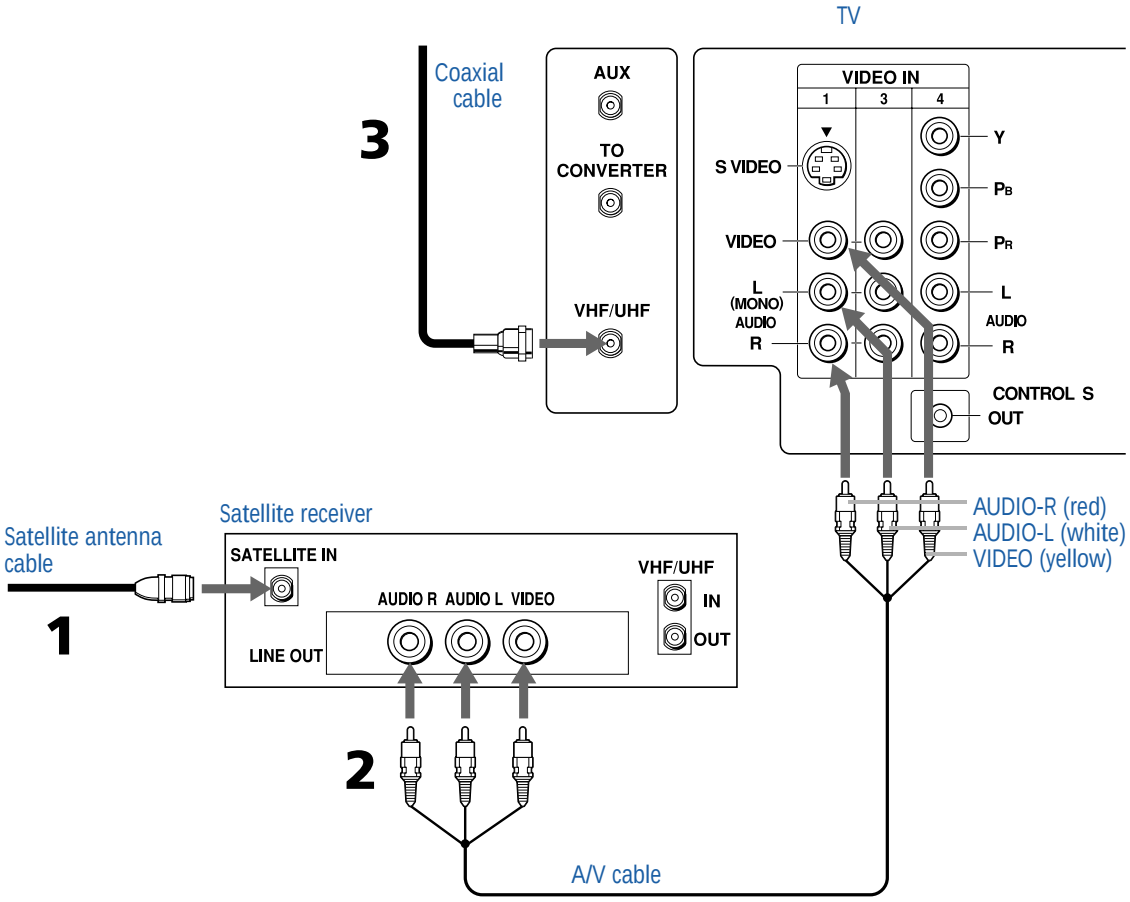

Downloaded from www.Manualslib.com manuals search engine

Connecting a Satellite Receiver with a VCR

1. Connect the satellite antenna cable to the satellite receiver's SATELLITE IN jack.
2. Connect the CATV cable to the VCR's VHF/UHF IN jack.
3. Using a coaxial cable, connect the VCR's OUT jack to the TV's VHF/UHF jack.
4. Using an A/V cable, connect the satellite receiver's Audio and Video OUT jacks to the VCR's Audio and Video IN jacks.
5. Using an A/V cable, connect the VCR's Audio and Video OUT jacks to the TV's Audio and Video IN jacks.

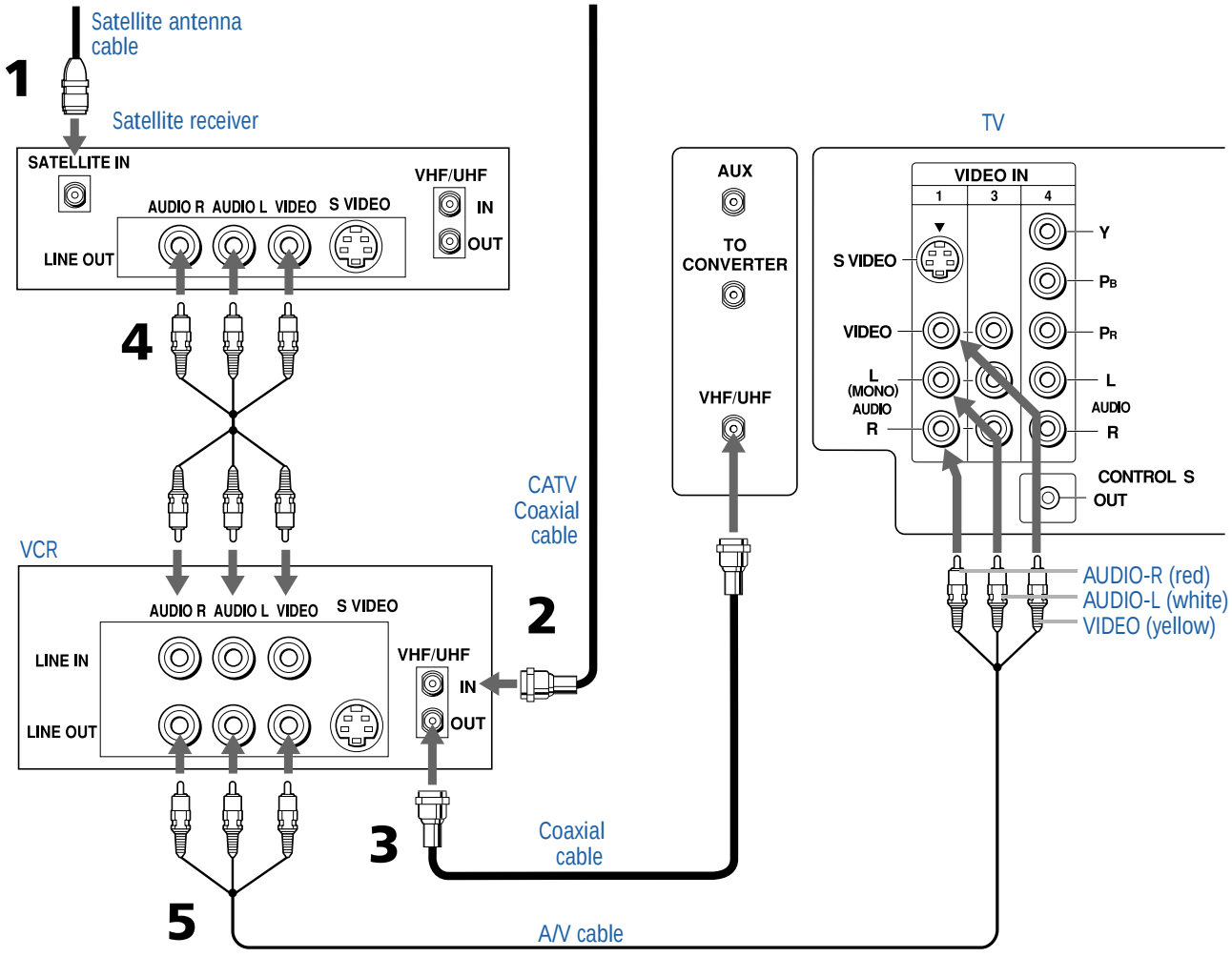

If the satellite receiver and VCR have S VIDEO jacks, you can use an S VIDEO cable to improve picture quality, replace the yellow video cable of each combination A/V cable with the S VIDEO cable. (Do not connect both types of cable at the same time.) You will still need audio cables for sound.

Downloaded from www.Manualslib.com manuals search engine

To change VCR video input

- ❑ See your VCR's user's guide for instructions.

To watch satellite TV, or the VCR

- ❑ Use the TV/VIDEO on the remote control to select VIDEO 1.

To watch cable TV

- ❑ Use the TV/VIDEO on the remote control to select VHF/UHF.

Downloaded from www.Manualslib.com manuals search engine

Connecting an Audio Receiver

For improved sound quality, you may want to send the TV's audio signals to your stereo system. The procedure below tells you how.

1 Using audio cables, connect the TV's Audio OUT jacks to the audio receiver's Audio LINE IN jacks.

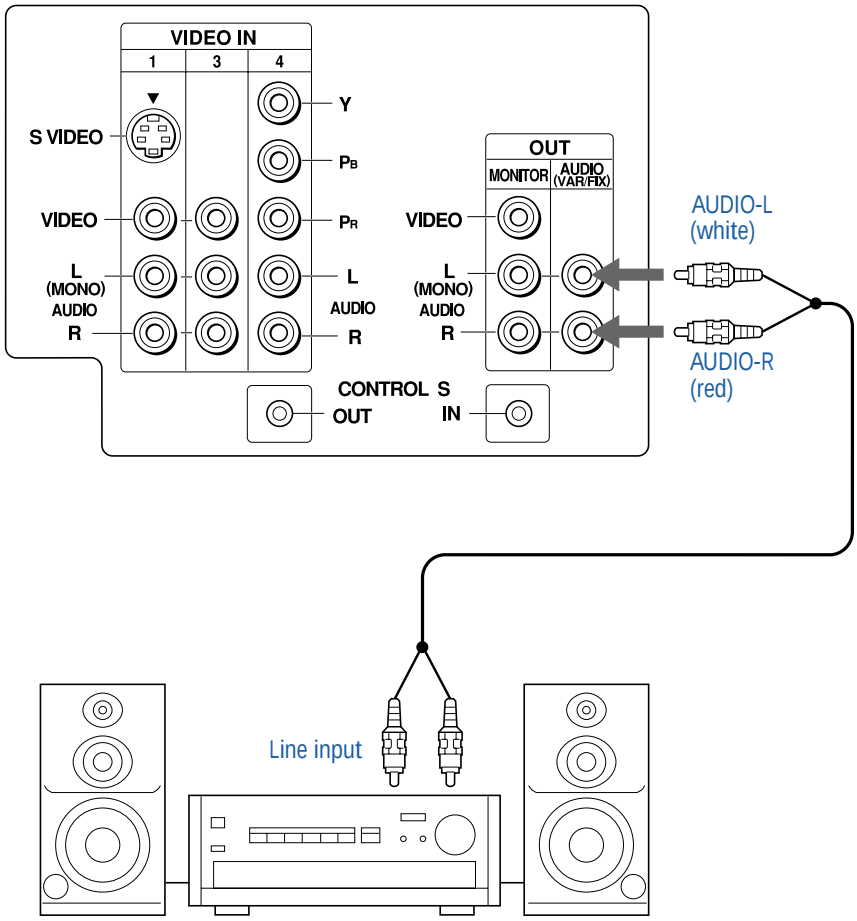

Downloaded from www.Manualslib.com manuals search engine

Connecting a DVD Player with Component Video Connectors

This is the preferred hookup to use if your DVD player has component video (Y, P_B, P_R) jacks.

1. Using three separate component video cables, connect the DVD player's Y, P_B and P_R jacks to the Y, P_B and P_R jacks on the TV. Use the VIDEO 4 connections.

> The Y, P_B and P_R jacks on your DVD player are sometimes labeled Y, C_B and C_R, or Y, B-Y and R-Y. If so, connect the cables to like colors.

2. Using an audio cable, connect the DVD player's Audio OUT jacks to the TV's Audio IN jacks. Be sure to use the same column (VIDEO 4) of inputs that you used for the video connection.

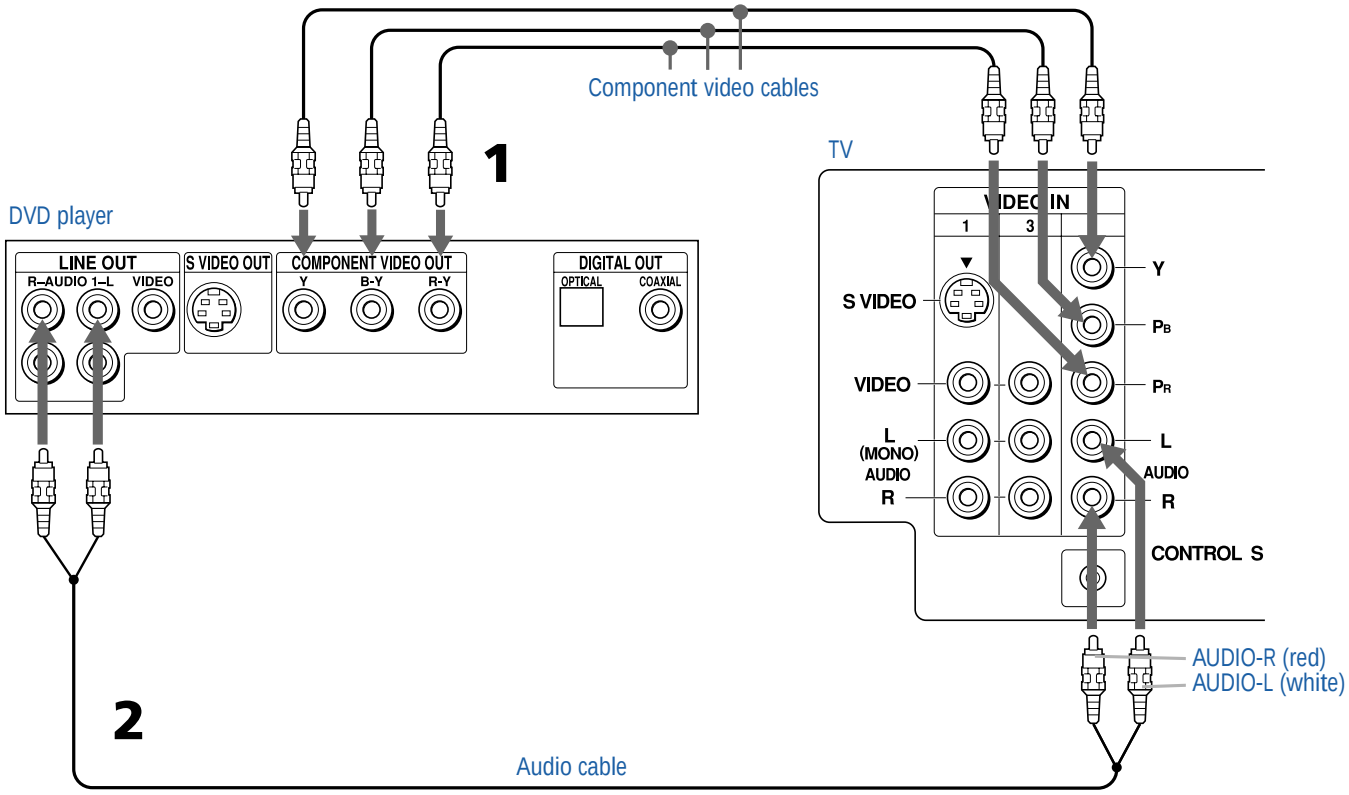

> You cannot record the signal from any equipment connected into the Y, P_B, P_R jacks.

Downloaded from www.Manualslib.com manuals search engine

Connecting a DVD Player with A/V Connectors

Use this hookup if your DVD player does not have component video (Y, P_B, P_R) jacks.

> An S VIDEO connection will give a good quality video signal, but if your DVD player has component video, that connection (described on the previous page) will give an even better video signal.

1. Using audio cables, connect the DVD player's Audio OUT jacks to the TV's Audio IN jacks.
2. Using an S VIDEO cable, connect the DVD player's S VIDEO jack to the TV's S VIDEO jack.

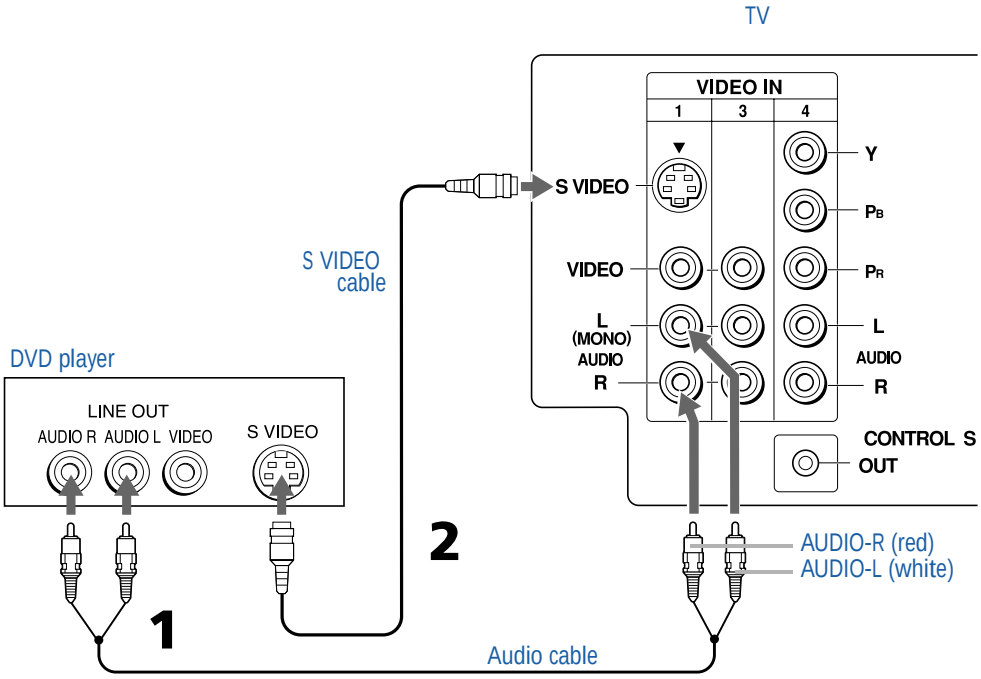

To switch between your TV and DVD

- ❑ Use the TV/VIDEO button on the remote control to switch from one input device to another.

Downloaded from www.Manualslib.com manuals search engine

Connecting a Camcorder

For easy connection of a camcorder, the TV has front Audio and Video inputs (shown below). If you prefer, however, you can connect the camcorder to the TV's rear Audio and Video IN jacks.

1 Using A/V cables, connect the camcorder's Audio and Video OUT jacks to the TV's Audio and Video IN jacks.

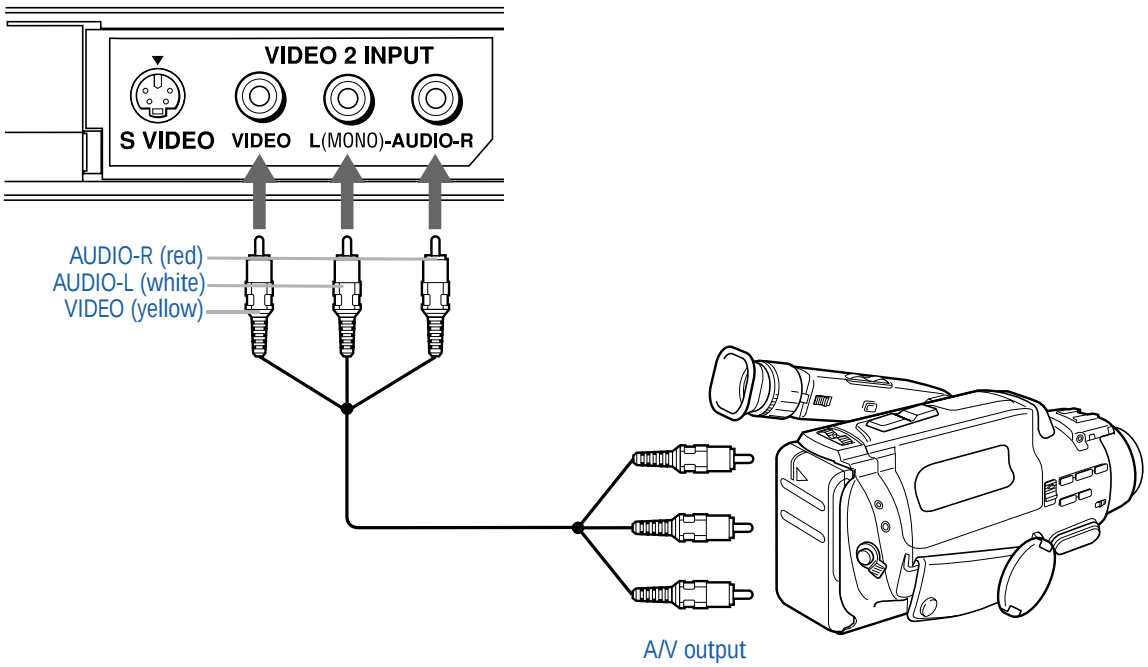

If you have a mono camcorder, connect its audio output to the TV's AUDIO L jack.

If the camcorder has an S VIDEO jack, you can use an S VIDEO cable to improve picture quality, replace the yellow video cable of the combination A/V cable with the S VIDEO cable. (Do not connect both types of cable at the same time.) You will still need audio cables for sound.

To view the camera's output

❑ Use the TV's remote control to set the appropriate input on the TV (VIDEO 2, in the illustration).

Downloaded from www.Manualslib.com manuals search engine

Using the CONTROL S Feature

The CONTROL S feature allows you to control other equipment through your TV. Pointing the remote control at your TV, rather than at the equipment, allows you to keep other equipment hidden or out of direct line of sight.

To control your other Sony equipment with your TV's remote control, use a CONTROL S cable (not supplied) to connect the equipment's CONTROL S IN jack to the TV's CONTROL S OUT jack.

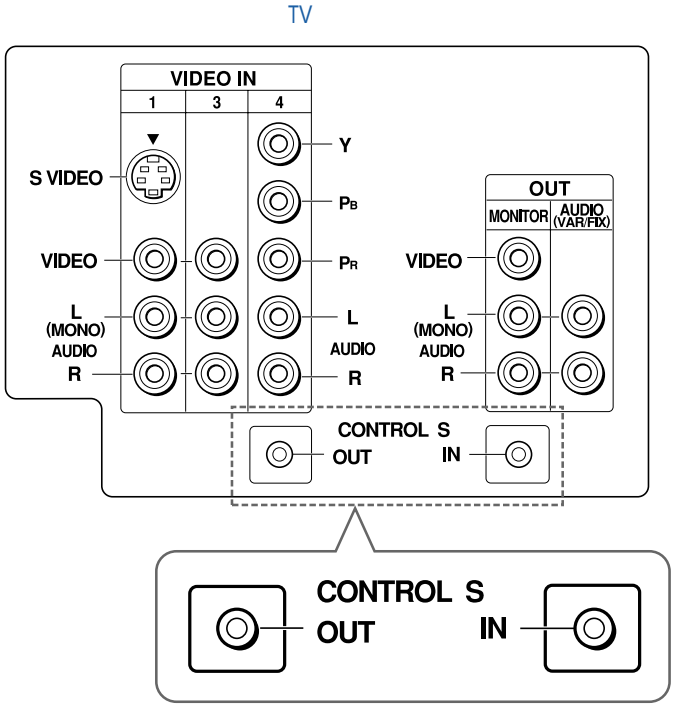

Downloaded from www.Manualslib.com manuals search engine

Setting Up the TV Automatically

After you finish connecting your TV, you need to run Auto Setup to set up your channels. The Auto Setup screen appears when you turn your TV on for the first time after installing it. If you do not want to set up the channels at this time, you can do it later by using the Auto Program feature in the Channel menu (see pages 42 and 42).

The Auto Setup feature does not apply for installations that use a cable box for all channel selection.

Using Auto Setup

1. Press POWER to turn on the TV.
2. Press the TV function button on the remote control.
3. Press CH+ on the front of your TV to run the Auto Setup or press CH– to exit. If you use the channel buttons on your remote control, be sure to use the main set of buttons.

To reset TV to factory settings

1. Turn the TV on.
2. Hold down the RESET button on the remote control.
3. Press and release the POWER button on the TV. (The TV will turn itself off, then back on.)
4. Release the RESET button.

Downloaded from www.Manualslib.com manuals search engine

Using the Features

Overview

This chapter describes how to use special features of your TV.

Topic	Page
Using Favorite Channels	30
Using Picture in Picture (PIP)	31
Using Wireless Headphones	34

Downloaded from www.Manualslib.com manuals search engine

Using Favorite Channels

The Favorite Channel feature lets you select programs from a list of favorite channels that you specify.

To display a list of your favorite channels

1. If you have not already done so, create a list of favorite channels. (See the Favorite Channels section of “Selecting Channel Options” on page 40.)
2. If any menus are open, close them.
3. Press ✣. (The Favorite Channels options appear.)

4. Press ↑ or ↓ to highlight the channel you want to watch. The program on that channel appears in the preview window. Press ✣ to select.

Downloaded from www.Manualslib.com manuals search engine

Using Picture in Picture (PIP)

Picture in Picture (PIP) allows you to watch two channels simultaneously — one in the main window and another in a secondary (PIP) window.

Displaying Picture in Picture

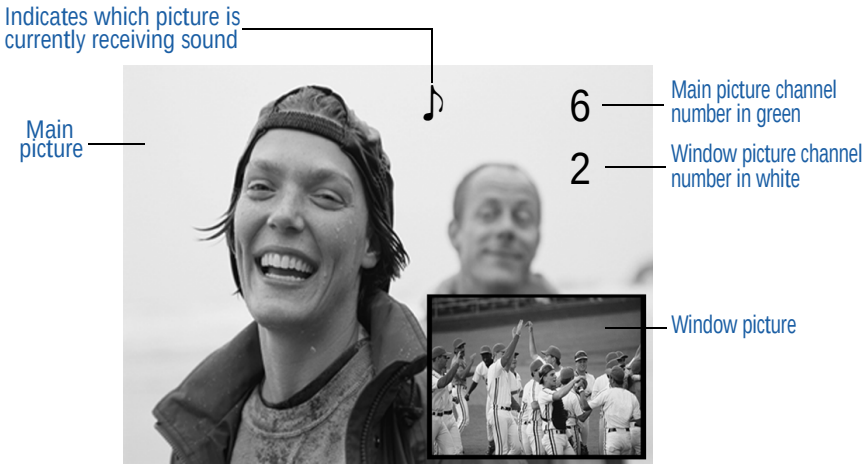

To use PIP:

1. Make sure your TV is tuned to a channel that you know is airing programming.
2. Press the ⧉ button (or the button labeled PIP). The window picture appears.
3. Use the yellow-labeled buttons on your remote control (see diagram) to control the PIP features (which are listed on the next page).

To check your PIP:

1. Tune your TV to a channel that you know is airing programming.
2. Press SWAP and select that same channel as the main window. You should now have the same program playing in both your main window and your picture window.
3. Use the PIP (yellow) CH+/- buttons to change the channel in the picture window.

✍ You must press TV (FUNCTION) before you can control PIP with the yellow-labeled buttons.

The AUX input cannot be viewed in the PIP window.

(Continued on the next page)

Downloaded from www.Manualslib.com manuals search engine

(Continued from the previous page)

4 Now use the main CH+/- buttons of your remote control to change the channel in the main window. If this does not work, check “Troubleshooting” on page 54 for potential solutions.

PIP Functions

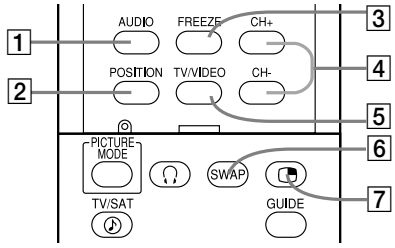

RM-Y182

Yellow-labeled PIP Button	Description
1 AUDIO	Alternates sound between the main picture and the window picture. The sound symbol (♪) appears for 3 seconds, indicating whether you are hearing sound from the main picture or the window picture.
2 POSITION	Moves the location of the window picture among the four corners of the screen.
3 FREEZE	Freezes the window picture. Press again to restore the picture. The main window continues to play as usual.
4 CH +/–	Changes the channel in the window picture. To change the channel in the main window, use the main CH+/- buttons at the bottom of the remote control.
5 TV/VIDEO	Cycles through available video equipment you have connected to the TV.
6 SWAP	Switches the main picture with the window picture. Press again to change them back.
7	Turns the PIP feature on and off. Press repeatedly to change the window size (1/9, 1/16, OFF).

Downloaded from www.Manualslib.com manuals search engine

To change channels/programs in the PIP window

- Use the yellow PIP CH+/- button to scroll through the TV channels.
- Use the yellow TV/VIDEO button to cycle through your other video equipment connected to the TV, such as your VCR, DVD player or Satellite Receiver.

Setups that affect your ability to use PIP

- Any video equipment you have connected to the AUX input cannot be viewed in the PIP window.
- If you are viewing all channels through a cable box, the PIP feature will not work. The cable box only unscrambles one signal at a time, so the window picture will be the same as the main picture.
- You can use PIP to see pictures from different sources on your TV. For example, you can have a regular (CATV) channel and the output from a VCR or DVD player or satellite receiver on screen at the same time using PIP. To do this:

  1. Connect the CATV cable to the UHF/VHF input on the back of the TV.
  2. Connect the peripheral (VCR or DVD player or satellite receiver) to any of the VIDEO IN inputs on the the back of the TV.
  3. Tune to one image in the main picture.
  4. Tune to a second image in the PIP window.

  You can then SWAP the images on the TV screen.

Be sure to label your video sources to make them easier to find in the Display. See "Video Label" on page 49 for labeling instructions.

You cannot use a signal from the AUX connection with PIP.

Downloaded from www.Manualslib.com manuals search engine

Using Wireless Headphones

Wireless headphones are included and can be used only with Sony TV models KV-32FV26 and 36FV26.

Installing the Battery

Install the supplied size AA (R6) battery into the headphones.

1 Open the battery compartment lid by pressing and sliding the lid as illustrated.

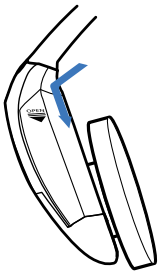

2 Insert the battery into the compartment with the positive side up and then close the lid.

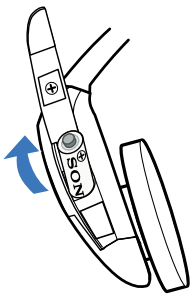

When used continuously, the battery lasts:

up to 40 hours	with an alkaline battery
up to 20 hours	with a manganese battery

Replace the battery with a new one when the sound becomes weak.

Downloaded from www.Manualslib.com manuals search engine

Using the Headphones

1 Press . (The icon and channel number display.)

2 Turn on the power by placing the headphones securely onto your head.

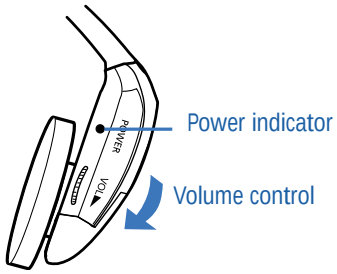

To listen to sound only from wireless headphones

❑ Turn down the TV speaker level, or press MUTING on the remote control.

To turn off headphones,

❑ Put down the headphones and press .

To ensure optimal sound reception with headphones

❑ Be sure that the infrared transmitter on the TV and the infrared sensors on the headphones have a clear (unobstructed) line of sight to one another.

To protect the TV's infrared transmitter from possible damage

❑ Press to turn off the headphone feature when the headphones are not in use.

To protect your hearing from sudden or prolonged excessive volume

❑ Set the headphone volume just high enough to hear comfortably.

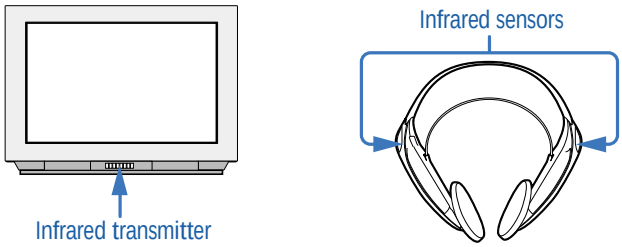

For optimal sound quality, be sure that the infrared transmitter on the TV, and the infrared sensors on the headphones, are not obstructed and can "see" one another.

Downloaded from www.Manualslib.com manuals search engine

Listening to Sound from PIP Main and Window Pictures

To use your headphones to listen to the sound from the main or window picture (when using PIP), select the audio source.

1 If PIP is not already started, press ◔ to display a PIP window.

2 Press 🎧.

The 🎧 icon and channel number appear for about three seconds. (The 🎧 is level with the channel number of the main picture.)

Main picture audio

Press 🎧 again to switch the audio to the PIP window. (The 🎧 changes - drops down - to the level of the PIP channel.)

Window picture audio

3 When you are finished using the headphones, press 🎧 to turn them off.

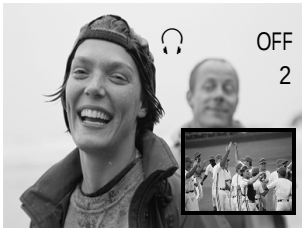

Headphones off

✍ Exiting from PIP returns the sound to the main picture.

The audio to the headphones automatically turns off when the TV is powered off.

SAP (Second Audio Programs) are not available in the PIP window.

Downloaded from www.Manualslib.com manuals search engine

Using the Menus

Overview

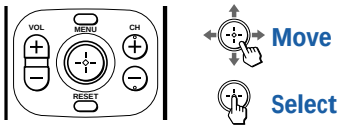

Joystick

Opening and choosing a menu:

1. Press MENU to display the Menu screen.
2. Use the joystick to move to the desired menu icon. Press ✣ to select it.
3. Use the joystick to scroll up and down through the features.
4. See the specific menu page for instructions on moving through the menu.

The Menu gives you access to the following features:

Menu Icon	Description	Page
Video	Allows you to make adjustments to your picture settings. It also allows you to customize the Picture Mode based on the type of program you are viewing.	38
Audio	Offers enhanced audio options such as listening to second audio programming (SAP) or customizing the Effect of the sound on your TV.	40
Channel	Allows you to set up a Favorite Channel list, run the Auto Program function, and more.	42
Parent	Lets you control the viewing of programs based on their ratings.	44
Timer	Lets you set the clock on your TV and allows you to program your TV for scheduled viewing using the Timers.	47
Setup	Provides several options for setting up your channels, labeling your video inputs, and selecting the language of the on-screen menus.	48
Basic	Provides quick access to frequently used settings.	50

To end a menu session:

Press MENU again

To end one menu session and move to another:

Press ⇧ to return to the menu icons.
Move the joystick to choose a menu icon and press ✣ to select it.

Downloaded from www.Manualslib.com manuals search engine

Using the Video Menu

To select the Video Menu

1. Press MENU.
2. Use the joystick to move to the Video icon and press ⊹.
3. Use the joystick to scroll up and down through the options.
4. Press ⊹ to select a feature. That feature's adjustment appears.
5. Use the joystick to make the desired adjustments.
6. Press ⊹ to select / set.
7. Press MENU to exit the menu screen.

To restore the factory default settings for Picture, Brightness, Color, Hue, Sharpness, Color Temp and VM.

❑ Press RESET on the remote control when in the Video menu.

Selecting Video Options

To change from one Video Mode to another, use the PICTURE MODE button on the remote control.

The Video Menu includes the following options.

Option	Description	
Mode *Customized picture viewing*	Vivid	Select for enhanced picture contrast and sharpness.
	Standard	Select for standard picture settings.
	Movie	Select to display a softer picture.
	Sports	Select to display a brighter, more intense picture.
	You can alter the Video Menu settings (Picture, Brightness, Color, etc.) for each Mode.	
Picture	Adjust to increase picture contrast and deepen the color, or decrease picture contrast and soften the color.	
Brightness	Adjust to brighten or darken the picture.	
Color	Adjust to increase or decrease color intensity.	
Hue	Adjust to increase or decrease the green tones.	
Sharpness	Adjust to sharpen or soften the picture.	

Downloaded from www.Manualslib.com manuals search engine

Option	Description	
Color Temp *White intensity adjustment*	Choose from three color temperatures:	
	Cool	Select to give the white colors a blue tint.
	Neutral	Select to give the white colors a neutral tint.
	Warm	Select to give the white colors a red tint (NTSC-Standard).
VM *Velocity Modulation*	Sharpens picture definition to give every object a sharp, clean edge. Select from High, Low, OFF.	

Downloaded from www.Manualslib.com manuals search engine

Using the Audio Menu

To select the Audio Menu

1. Press MENU.
2. Use the joystick to move to the Audio icon and press ⊹.
3. Use the joystick to scroll up and down through the options.
4. Press ⊹ to select an option. That option's settings appear.
5. Use the joystick to scroll through the settings.
6. Press ⊹ to select the desired setting.
7. Press MENU to exit the menu screen.

To restore the factory default settings for Treble, Bass, and Balance

❑ Press RESET on the remote control when in the Audio menu.

Selecting Audio Options

As a shortcut to using the menus, use the ♪ button on the remote control to cycle through available audio settings.

The Audio Menu includes the following options:

Option	Description	
Treble	Adjust to decrease or increase higher-pitched sounds.	
Bass	Adjust to decrease or increase lower-pitched sounds.	
Balance	Adjust to emphasize left or right speaker balance.	
Steady Sound	ON	Select to stabilize the volume.
	OFF	Select to turn off Steady Sound.
Effect	SRS	Produces a dynamic three-dimensional sound for stereo signals.
	Simulated	Adds a surround-like effect to mono programs.
	Surround	Select for Surround sound.
	OFF	Normal stereo or mono reception.
MTS *Enjoy stereo, bilingual and mono programs*	Stereo	Select for stereo reception when viewing a program broadcast in stereo.
	Auto-SAP	Select to automatically switch the TV to second audio programs when a signal is received. (If no SAP signal is present, the TV remains in Stereo mode.)
	Mono	Select for mono reception. (Use to reduce noise during weak stereo broadcasts.)
Speaker	ON	Select to turn on the TV speakers.
	OFF	Select to turn off the TV speakers and listen to the TV's sound only through your external audio system speakers.

Downloaded from www.Manualslib.com manuals search engine

Option	Description	
Audio Out *Easy control of volume adjustments*	This option can be set only when the Speaker option is set to OFF.	
	Variable	The TV's speakers are turned off, but the volume output from your audio system can still be controlled by the TV's remote control.
	Fixed	The TV's speakers are turned off and the volume output of the TV is fixed. Use your audio receiver's remote control to adjust the volume through your audio system.

Downloaded from www.Manualslib.com manuals search engine

Using the Channel Menu

To select the Channel Menu

1. Press MENU.
2. Use the joystick to move to the Channel icon and press ✣.
3. Use the joystick to scroll up and down through the options.
4. Press ✣ to select a feature. That feature's options appear.
5. Use the joystick to scroll through the options.
6. Press ✣ to select the desired option.
7. Press MENU to exit the menu screen.

Selecting Channel Options

The Channel Menu includes the following options:

Option	Description	
Favorite Channel	1 Press ✣ to select a favorite channel number. 2 Use the joystick to scroll through the channels until you find the channel you want to add to your favorites. 3 Press ✣ to select it.	
Cable	ON	Select if you are receiving cable channels with a CATV cable.
	OFF	Select if you are using an antenna.
	You should run Auto Program after changing the cable setting.	
Channel Fix *Useful when you have a cable box or satellite receiver connected*	2-6	"Fix" your TV's channel setting to 3 or 4 and use the cable box or Satellite receiver to change channels. Select one of these settings if you have connected the device to the VHF / UHF jack.
	AUX 2-6	Same as 2-6, except you select one of these settings if you have connected the device to the AUX jack (see page 8).
	VIDEO 1	Use this setting if you have connected the device to the Audio and Video IN jacks.
Auto Program	Automatically programs the TV for all receivable channels.	

Downloaded from www.Manualslib.com manuals search engine

Option	Description
Channel Skip/Add	Removes and adds viewable channels. **1** Use the joystick to scroll through the channels until you find the channel you want to skip / add. **2** Press ✣ to select it. **3** Press the joystick to toggle between “Add” or “Skip.” **4** Press ✣ to select.
Channel Label	Label up to 40 channels with their station call letters.

Channels that you set to be skipped can be accessed only with the 0-9 buttons.

Downloaded from www.Manualslib.com manuals search engine

Using the Parent Menu

The Parent menu allows you to set up the TV to block programs according to their content and rating levels.

To select the Parent Menu

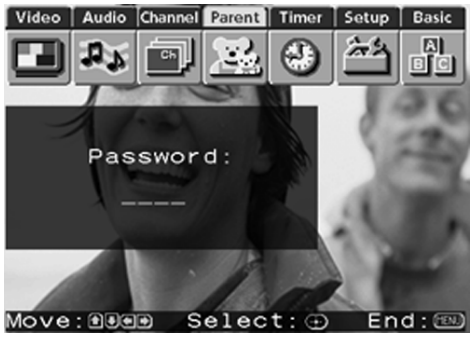

1. Press MENU.
2. Use the joystick to move to the Parent icon and press ⊹.
3. Use the 0-9 buttons on the remote control to enter your four-digit password.
4. Confirm your password by entering it again. (The Parent menu options appear.)
5. Use the joystick to scroll through the settings.
6. Press ⊹ to select the desired setting.
7. Press MENU to exit the menu screen.

> You need your password for any future access into the Parent menu. If you lose your password, see "Lost password" on page 57.

Using the Parent Menu

If you are not familiar with the Parental Guideline rating system, you should select Child, Youth, or Young Adult to help simplify the rating selection. To set more restrictive ratings, select Custom.

For descriptions of Child, Youth, and Young Adult ratings, see page 45.

The Parent menu includes the following options.

Option	Description	
Parental Lock *Turn ratings on/off and select a rating system*	OFF	Parental lock is off. No programs are blocked from viewing.
	Child	Maximum ratings permitted are: ❑ US: TV-Y, TV-G, G ❑ Canada: C, G
	Youth	Maximum ratings permitted are: ❑ US: TV-PG, PG ❑ Canada: 8 ans+
	Young Adult	Maximum ratings permitted are: ❑ US: TV-14, PG-13 ❑ Canada: 14+, 13 ans+
	Custom	Select to set ratings manually. ❑ US: See page 45 for details. ❑ Canada: See page 46 for details.
Change Password	For changing your password.	

Downloaded from www.Manualslib.com manuals search engine

US Models: Selecting Custom Rating Options

The content ratings will increase depending on the level of the age-based rating. For example, a program with a TV-PG V (Violence) rating may contain moderate violence, while a TV-14 V (Violence) rating may contain more intense violence.

To ensure maximum blocking capability, the age-based ratings should be blocked.

If you block unrated TV programs, be aware that the following types of programs may be blocked: emergency broadcasts, political programs, sports, news, public service announcements, religious programs and weather.

For US models, the Custom Rating Menu includes the following options. (For Canadian models, see page 46.)

Option	Description	
Movie Rating	G	All children and General Audience.
	PG	Parental Guidance suggested.
	PG-13	Parental Guidance for children under 13.
	R	Restricted viewing, parental guidance is suggested for children under 17.
	NC-17 and X	No one 17 or under allowed.
TV Rating *Block programs by their rating, content or both*	Age-Based Options	
	TV-Y	All children.
	TV-Y7	Directed to older children.
	TV-G	General Audience.
	TV-PG	Parental Guidance suggested.
	TV-14	Parents Strongly cautioned.
	TV-MA	Mature Audience only.
	Content-Based Options	
	FV	Fantasy Violence.
	D	Suggestive Dialogue.
	L	Strong Language.
	S	Sexual situations.
	V	Violence.
Unrated *Block programs or movies that are broadcast without a rating*	Block	Blocks all programs and movies that are broadcast without a rating.
	Allow	Allows programs and movies that are broadcast without a rating.

Viewing Blocked Programs

You can view blocked programs by entering the password. Press the ENTER button when tuned to a blocked program, then enter the password. This temporarily switches off the Parental Lock. To reactivate the Parental Lock settings, turn off the TV. When the TV is turned on again, your Parental Controls settings are reactivated.

(Continued on the next page)

Downloaded from www.Manualslib.com manuals search engine

(Continued from the previous page)

Canadian Models: Selecting Custom Rating Options

For Canadian models, the Custom Rating Menu includes the following options. (For US models, see page 45.)

Option	Description	
English Rating	C	All children.
	C8	Children 8 years and older.
	G	General programming.
	PG	Parental Guidance.
	14+	Viewers 14 and older.
	18+	Adult programming.
French Rating	G	General programming.
	8 ans+	Not recommended for young children.
	13 ans+	Not recommended for ages under 13.
	16 ans+	Not recommended for ages under 16.
	18 ans+	Programming restricted to adults.
USA Rating	See “US Models” on page 45 for details.	

Viewing Blocked Programs

You can view blocked programs by entering the password. Press the ENTER button when tuned to a blocked program, then enter the password. This temporarily switches off the Parental Lock. To reactivate the Parental Lock settings, turn off the TV. When the TV is turned on again, your Parental Controls settings are reactivated.

Downloaded from www.Manualslib.com manuals search engine

Using the Timer Menu

To select the Timer Menu

1 Press MENU.

2 Use the joystick to move to the Timer icon and press ✣.

To set the Current Time

1 Use the joystick to select "Current Time", then press ✣.

2 If it is currently Daylight Savings Time, be sure to set the mode to "ON" first. (Daylight Savings Time starts in the Spring, and ends in the Fall.)

3 Use the joystick to enter the correct time, then press ✣.

4 Press MENU to exit the menu screen.

To set the Timer

Before setting the timer, be sure to set your TV's clock to the current time (and, if appropriate, to Daylight Savings Mode).

1 Use the joystick to move to "Timer 1" or "Timer 2", then press ✣.

2 Use the joystick to enter your date, time and channel preferences, then press ✣ to select each one.

3 Press MENU to exit the menu screen.

To reset the Clock or Timers

❑ Press RESET on the remote control, when in the Timer menu, to reset to the factory defaults.

Selecting Timer Options

The Timer Menu includes the following options:

Option	Description	
Timer 1 Timer 2	Program	Select to set the Timer by day, time, duration, and channel.
	OFF	Select to turn off the Timer. (Your previous settings will be saved.)
Current Time	Set the current time.	
Daylight Savings	ON	Select in the spring to turn on this mode during Daylight Saving Time.
	OFF	Select in the fall to turn off this mode at the end of Daylight Saving Time.

Downloaded from www.Manualslib.com manuals search engine

Using the Setup Menu

To select the Setup Menu

1. Press MENU.
2. Use the joystick to move to the Setup icon and press ✣.
3. Use the joystick to scroll through the features.
4. Press ✣ to select a feature. (That feature's options appear.)
5. Use the joystick to scroll through the options.
6. Press ✣ to select the desired option.
7. Press MENU to exit the menu screen.

Selecting Setup Options

The Setup Menu includes the following options:

Option	Description	
Caption Vision	Allows you to select from three closed-caption modes (for programs that are broadcast with closed caption).	
	CC1, CC2, CC3, CC4	Displays a printed version of the dialog or sound effects of a program. (Should be set to CC1 for most programs.)
	TEXT1, TEXT2, TEXT3, TEXT4	Displays network / station information presented using either half or the whole screen (if available). For closed captioning, set to CC1.
	XDS (Extended Data Service)	Displays a network name, program name, program length, and time of the show (if the broadcaster offers this service).
	OFF	Turns off Caption Vision.

Downloaded from www.Manualslib.com manuals search engine

Option	Description	
Video Label	Allows you to label the audio/video components you connected to the TV, so you can identify them when using the TV/VIDEO button. When in the Setup menu's Video Label feature, use the joystick to highlight an input to label, then press ✣ to select it. Use the joystick to scroll through the labels. Press ✣ to select the component you connected to each of the input jacks on the back of your TV. Select "Skip" if you do not have a component connected to a particular set of input jacks.	
	VIDEO 1/2/3	Choose VHS, 8mm, Beta, LD, Game, SAT, DVD, Web, Receiver, DTV, Skip
	VIDEO 4	Choose DVD, DTV, Skip
	If you select "Skip", your TV skips this connection when you press the TV/VIDEO button.	
Tilt Correction	Allows you to correct any tilt of the picture.	
Language	Select to display all on-screen menus in your language of choice.	
16:9 Enhanced	Provides enhanced picture resolution for widescreen (anamorphic) sources, such as selected DVD titles (only available when the TV is in VIDEO mode). Press TV/VIDEO and select from one of the following options:	
	ON	To activate.
	OFF	To turn off 16:9.
Demo	Runs a demonstration of on-screen menus.	

To use this feature with widescreen DVDs, set your DVD player to 16:9 aspect ratio.

Downloaded from www.Manualslib.com manuals search engine

Using the Basic Menu

To select the Basic Menu

1. Press MENU.
2. Use the joystick to move to the Basic icon and press ⊕.
3. Use the joystick to scroll through the features.
4. Press ⊕ to select a feature. (That feature's options appear.)
5. Use the joystick to scroll through the options.
6. Press ⊕ to select the desired option.
7. Press MENU to exit the menu screen.

Selecting Basic Options

As a shortcut to using the menus, use the ♪ button on the remote control to cycle through available audio settings.

The Basic Menu includes the following options:

Option	Description	
Picture	Adjust the picture contrast.	
Caption Vision	Displays your current advanced-menu setting: (CC1–4, TEXT 1–4, or XDS) and OFF.	
Effect	SRS	Produces a dynamic three-dimensional sound for stereo signals.
	Simulated	Adds a surround-like effect to mono programs.
	Surround	Select for Surround sound.
	OFF	Normal stereo or mono reception.
Advanced Menu	Select to return to the advanced menus.	

Downloaded from www.Manualslib.com manuals search engine

Other Information

Overview

This chapter includes the following topics:

Topic	Page
Programming the Remote Control	52
Operating Other Components with Your TV Remote Control	54
Troubleshooting	56
Specifications	58
Index	59

Downloaded from www.Manualslib.com manuals search engine

Programming the Remote Control

The remote control is preset to operate Sony-brand video equipment.

Sony Equipment	Switch Position on Remote Control	Programmable Code Number
Beta, ED Beta VCRs	AV1	303
8 mm VCR	AV2	302
VHS VCR	AV3	301
DVD Player	DVD	751

If you have video equipment other than Sony brand that you want to control with the TV's remote control, use the following procedure to program the remote control.

The equipment must have infrared (IR) remote capability in order to be used with the remote control.

1 Check the list of "Manufacturer's Codes" on page 53, and find the three-digit code number for the manufacturer of your component. (If more than one code number is listed, use the number listed first.)

You must do step 4 within 10 seconds of step 3, or you must redo steps 2 and 3.

2 Press CODE SET.

3 Press the function button for the type of component you want to control with the TV's remote control (VCR / DVD or SAT / CABLE).

4 Enter the three-digit manufacturer's code number.

5 Press ENTER.

6 To check if the code number works, aim the TV's remote control at the component and press the green POWER button that corresponds with that component. If it responds, you are done. If not, try using another code listed for that manufacturer.

- If more than one code number is listed, try entering them one by one until you come to the correct code for your component.
- If you enter a new code number, the code number you previously entered at that setting is erased.
- In some cases, you may not be able to operate your component with the supplied remote control. In such cases, use the component's own remote control unit.
- Whenever you remove the batteries to replace them, the code numbers may revert to the factory setting and must be reset.

Downloaded from www.Manualslib.com manuals search engine

Manufacturer's Codes

VCRs

Manufacturer	Code
Sony	301
Admiral (M. Ward)	327
Aiwa	338, 344
Audio Dynamic	314, 337
Broksonic	319, 317
Canon	309, 308
Citizen	332
Craig	302, 332
Criterion	315
Curtis Mathes	304, 338, 309
Daewoo	341, 312, 309
DBX	314, 336, 337
Dimensia	304
Emerson	319, 320, 316, 317, 318, 341
Fisher	330, 335
Funai	338
General Electric	329, 304, 309
Go Video	322, 339, 340
Goldstar	332
Hitachi	306, 304, 305,338
Instant Replay	309, 308
JC Penney	309, 305, 304, 330, 314, 336, 337
JVC	314, 336, 337, 345, 346, 347
Kenwood	314, 336, 332, 337
LXI (Sears)	332, 305, 330, 335, 338
Magnavox	308, 309, 310
Marantz	314, 336, 337
Marta	332
Memorex	309, 335
Minolta	305, 304
Mitsubishi / MGA	323, 324, 325, 326
Multitech	325, 338, 321
NEC	314, 336, 337
Olympic	309, 308
Optimus	327
Panasonic	308, 309, 306, 307
Pentax	305, 304
Philco	308, 309
Philips	308, 309, 310
Pioneer	308
Quasar	308, 309, 306
RCA / PROSCAN	304, 305, 308, 309, 311, 312, 313, 310, 329
Realistic	309, 330, 328, 335, 324, 338
Sansui	314
Samsung	322, 313, 321
Sanyo	330, 335
Scott	312, 313, 321, 335, 323, 324, 325, 326
Sharp	327, 328
Shintom	315
Signature 2000 (M. Ward)	338, 327
SV2000	338
Sylvania	308, 309, 338, 310
Symphonic	338
Tashiro	332
Tatung	314, 336, 337
Teac	314. 336, 338, 337
Technics	309, 308
Toshiba	312, 311
Wards	327, 328, 335, 331, 332
Yamaha	314, 330, 336, 337
Zenith	331

Laserdisc Players

Manufacturer	Code
Sony	701
Panasonic	704, 710
Pioneer	702

DVD Players

Manufacturer	Code
Sony	751
Hitachi	758
JVC	756
Magnavox	757
Mitsubishi	761
Oritron	759
Panasonic	753
Philips	757
Pioneer	752
RCA	755
Samsung	758
Toshiba	754
Zenith	760

Cable Boxes

Manufacturer	Code
Sony	230
Hamlin / Regal	222, 223, 224, 225, 226
Jerrold / G. I.	201, 202, 203, 204, 205, 206, 207, 208, 218
Oak	227, 228, 229
Panasonic	219, 220, 221
Pioneer	214, 215
Scientific Atlanta	209, 210, 211
Tocom	216, 217
Zenith	212, 213

Satellite Receivers

Manufacturer	Code
Sony	801
Dish Network	810
Echostar	810
General Electric	802
Hitachi	805
Hughes	804
Mitsubishi	809
Panasonic	803
RCA / PROSCAN	802, 808
Toshiba	806, 807

Downloaded from www.Manualslib.com manuals search engine

Operating Other Components with Your TV Remote Control

Operating a VCR

Move the slide switch to the AV input you coded for the VCR.

To Do This ...	Press
Turn on / off	VCR/DVD (green POWER button)
Select VCR	VCR/DVD (FUNCTION button)
Change channels	CH +/-
Record	● and ▭ simultaneously.
Play	►
Stop	■
Fast forward	►►
Rewind the tape	◄◄
Pause	❚❚ (press again to resume normal playback)
Search the picture forward or backward	►► or ◄◄ during playback (release to resume normal playback)
Change input mode	TV/VCR

Operating a DVD Player

Move the slide switch to the AV input you coded for the DVD Player.

To Do This ...	Press
Turn on / off	VCR/DVD (green POWER button)
Select DVD	VCR/DVD (FUNCTION button)
Play	►
Stop	■
Pause	❚❚ (press again to resume normal playback)
Step through different tracks of an audio disc	►► to step forward, or ◄◄ to step backward
Step through different chapters of a video disc	CH+ to step forward, or CH- to step backward
Select tracks directly	0-9 buttons
Display the menu (Setup)	MENU

Downloaded from www.Manualslib.com manuals search engine

Operating a Cable Box

To Do This ...	Press
Turn on / off	SAT/CABLE (green POWER button)
Select Cable Box	SAT/CABLE (FUNCTION button)
Select a channel	0-9 buttons, ENTER
Change channels	CH +/-
Back to previous channel	JUMP

Operating a Satellite Receiver

To Do This ...	Press
Turn on / off	SAT/CABLE (green POWER button)
Select Satellite Receiver	SAT/CABLE (FUNCTION button)
Select a channel	0-9 buttons, ENTER
Change channels	CH +/-
Back to previous channel	JUMP
Change input mode	TV/SAT
Display channel number	DISPLAY
Display DBS guide	GUIDE
Display DBS menu	MENU
Move highlight (cursor)	Joystick
Select item	✣ button

Operating an MDP (Laserdisc Player)

Move the slide switch to the AV input you coded for the selected switch position.

To Do This ...	Press
Turn on / off	VCR/DVD (green POWER button)
Select AV 1, 2, 3 or DVD switch position	VCR/DVD (FUNCTION button)
Play	►
Stop	■
Pause	❚❚ (press again to resume normal playback)
Search the picture forward or backward	►► or ◄◄ during playback (release to resume normal playback)
Search a chapter forward or backward	CH +/-

Downloaded from www.Manualslib.com manuals search engine

Troubleshooting

Problem	Possible Remedies
Reset TV to factory settings	❑ Turn on the TV. While holding down the RESET button on the remote control, press the POWER button on the TV. (The TV will turn itself off, then back on again.) Release the RESET button.
No picture (screen not lit), no sound	❑ If your TV does not turn on, and a red light keeps flashing, your TV may need service. Call your local Sony Service Center. ❑ Make sure the power cord is plugged in. ❑ Push the power button on the front of the TV. ❑ Check to see if the TV / VIDEO setting is correct: when watching TV, set to TV. When watching connected equipment, set to VIDEO 1, 2, 3, or 4, as appropriate. ❑ Try another channel, it could be station trouble.
Remote control does not operate	❑ Batteries could be weak. Replace the batteries. ❑ Press TV (FUNCTION) when operating your TV. ❑ Make sure the TV's power cord is connected securely to the wall outlet. ❑ Locate the TV at least 3-4 feet away from fluorescent lights. ❑ Check the orientation of the batteries.
Dark, poor or no picture (screen lit), good sound	❑ Adjust the Picture setting in the Video menu (see page 38). ❑ Adjust the Brightness setting in the Video menu (see page 38). ❑ Check antenna / cable connections.
Good picture, no sound	❑ Press MUTING so that "MUTING" disappears from the screen (see page 4). ❑ Make sure Speaker is set to ON in the Audio menu (see page 40).
Cannot receive upper channels (UHF) when using an antenna	❑ Change Cable to OFF (see page 42). ❑ Use Auto Program in the Channel menu to add receivable channels that are not presently in the TV's memory (see page 42).
No color	❑ Adjust the Color settings in the Video menu (see page 38).
Only snow and noise appear on the screen	❑ Check the antenna / cable connections. ❑ Try another channel; it could be station trouble. ❑ Press ANT to change the input mode (see page 5).
Dotted lines or stripes	❑ Adjust the antenna. ❑ Move the TV away from noise sources such as cars, neon signs, or hair-dryers.
TV is fixed to one channel	❑ Use Auto Program in the Channel menu to add receivable channels that are not presently in the TV's memory (see page 42). ❑ Check your Channel Fix settings (see page 42).
Double images or ghosts	❑ Using a highly directional outdoor antenna or a cable may solve the problem.
Cannot operate menu	❑ If the item you want to choose appears in gray, you cannot select it.
Cannot receive any channels when using cable TV	❑ Use Auto Program in the Channel menu to add receivable channels that are not presently in the TV's memory (see page 42). ❑ Check your cable settings. ❑ Make sure Cable is set to ON in the Channel menu (see page 42).

Downloaded from www.Manualslib.com manuals search engine

Problem	Possible Remedies
Cannot gain enough volume when using a cable box	❑ Increase the volume of the cable box using the cable box's remote control. Then press TV (FUNCTION) and adjust the TV's volume.
Cannot receive channels	❑ Use Auto Program in the Channel menu to add receivable TV channels that are not presently in TV memory (see page 42).
Unable to select a channel	❑ Use Auto Program in the Channel menu to add receivable TV channels that are not presently in TV memory (see page 42).
Lost password	❑ In the password screen (see page 44), enter the following master password: 4357. The master password clears your previous password; it cannot be used to temporarily unblock channels.
Cannot change channels with the remote control	❑ If you are using the TV to change channels, be sure the TV FUNCTION button is selected. ❑ If you are using another device to change channels, be sure you have not inadvertantly switched your TV from the channel 3 or 4 setting. Use the Channel Fix feature to "fix" the channel based on the hookup you used (see page 42). ❑ If you are using another device to change channels, be sure to press the green "FUNCTION" button for that device. For example, if you are using your VCR to change channels, be sure to press the VCR/DVD FUNCTION button.
Cannot cycle through the other video equipment connected to the TV	❑ Be sure the Video Label feature has not been set to "Skip" (see page 49).
There is a black box on the screen	❑ You have selected a text option in the Setup menu and no text is available. (See page 48 to reset Setup selections.) To turn off this feature, select OFF in the Caption Vision option. If you were trying to select closed captioning, select CC1 instead of TEXT 1-4.
The remote control will not work in PIP mode	❑ Press the TV FUNCTION button. You may have inadvertantly pressed the VCR/DVD FUNCTION button, which changes the PIP buttons to VCR mode.
There is no window picture or it is just static	❑ Be sure your window picture is set to a video source / channel that has a program airing. ❑ You may be tuned to a video input with nothing connected to it. Try cycling through your video inputs using the PIP TV/VIDEO button. ❑ PIP is not set to receive a signal from the AUX input. If you connected a VCR, DVD player or Satellite Receiver to the AUX input on the TV, it will not show in the small window picture.
I get the same program in the window picture as in the main picture	❑ Both may be set to the same channel. Try changing channels in either the main picture or the window picture. ❑ You may using a cable box for all your channels. If you must have a cable box to unscramble all channels, then you are limited to only one picture (because that is all that the cable box allows - one channel at a time). But if you need the cable box only part time (to unscramble premium channels), then you can use PIP when you are not using the cable box (when you use the CATV cable without going through the box).
I cannot get anything but TV in my window picture	❑ Be sure the video label has not been set to skip your video inputs. (See the Setup menu on page 49.)

If, after reading these operating instructions, you have additional questions related to the use of your Sony television, please call our Direct Response Center at 1-800-222-SONY (7669) (U.S. residents only) or (416) 499-SONY (7669) (Canadian residents only).

Downloaded from www.Manualslib.com manuals search engine

Specifications

All Models (General)

Picture Tube	FD Trinitron® tube	
Antenna	75 ohm external terminal for VHF/UHF	
Television System	NTSC, American TV Standard	
Channel Coverage		
VHF	2-13	
UHF	14-69	
CATV	1-125	
Power Requirements	120V, 60 Hz	
Number of Inputs/Outputs		
Video (IN)	3	1 Vp-p, 75 ohms unbalanced, sync negative
S Video (IN)	2	Y: 1 Vp-p, 75 ohms unbalanced, sync negative C: 0.286 Vp-p (Burst signal), 75 ohms
Audio (IN)	4	500 mVrms (100% modulation) Impedance: 47 kilohm
Variable/Fixed Audio (OUT)	1	More than 408 mVrms at the maximum volume setting (Variable) More than 408 mVrms (Fixed) Impedance (output): 2 kilohms
CONTROL-S (IN/OUT)	1	
Component Video Input	1 (Y, P_B, P_R)	Y: 1.0 Vp-p, 75 ohms unbalanced, sync negative; P_B: 0.7 Vp-p, 75 ohms P_R: 0.7 Vp-p, 75 ohms

KV-32FV27

Supplied Accessories		
Remote Control	RM-Y182	
AA (R6) Batteries	2 supplied for remote control, 1 supplied for wireless headphones	
Wireless Stereo Headphones	MDR-IF0230	
Optional Accessories		
AV Cable	VMC-810/820/830 HG	
Audio Cable	RKC-515HG	
Component Video Cable	VMC-10/30 HG	
TV Stand	SU-32FD4	
Visible Screen Size	32 in (812.8 mm) picture measured diagonally	
Actual CRT Size	34 in (863.6 mm) picture measured diagonally	
Speaker Output	15 W x 2	
Dimensions (W x H x D)	882 x 687 x 592 mm (34 3/4 x 27 x 23 1/4 in)	
Mass	80 kg (176 lbs)	
Power Consumption		
In Use	210 W	
In Standby	2 W	

Downloaded from www.Manualslib.com manuals search engine

KV-36FV27

Supplied Accessories	
Remote Control	RM-Y182
AA (R6) Batteries	2 supplied for remote control, 1 supplied for wireless headphones
Wireless Stereo Headphones	MDR-IF0230
Optional Accessories	
AV Cable	VMC-810/820/830 HG
Audio Cable	RKC-515HG
Component Video Cable	VMC-10/30 HG
TV Stand	SU-36FD4
Visible Screen Size	36 in (914.4 mm) picture measured diagonally
Actual CRT Size	38 in (965.2 mm) picture measured diagonally
Speaker Output	15 W x 2
Dimensions (W x H x D)	975 x 757 x 633 mm (38 3/8 x 29 3/4 x 24 7/8 in)
Mass	107 kg (236 lbs)
Power Consumption	
In Use	210 W
In Standby	2 W

Downloaded from www.Manualslib.com manuals search engine

Index

16:9 (widescreen) 2, 49

A

Activating a PIP screen 31
Adding channels to the channel list 42
Adjusting the picture definition 39
Adjusting the audio
    Steady sound 40
ANT button 5
Aspect ratio, 16:9 49
Audio menu 37, 40
audio receiver, connecting 22
Auto Program (channel setup) 27, 42
Auto-SAP 40
Auto setup 27

B

balance, adjusting 40
Basic menu 37, 50
bass, adjusting 40
batteries
    inserting in remote 3
    inserting in wireless headphones 34
bilingual audio 40
blocking programs. See ratings.
brightness, adjusting 38

C

cable
    box, connecting with VCR 15
    connecting 10-13
    setting ON / OFF 42
    with VCR, connecting 14
cable box, using with TV remote control 55
camcorder, connecting 25
Caption Vision 48, 50
CATV. see cable
Channel List
    Adding channels to 3
    Removing channels from 42
Channel menu 37
Channel Setup menu 42
Channel Skip / Add 43
channels
    creating labels 43
    setting up 27
closed caption modes 48
Code Set Button 4, 52
color temperature, adjusting 39
color, adjusting 38
Connecting:
    Audio Receiver 22
    Cable or antenna 10-13
    Cable box 11-13
    Camcorder 25
    DVD player 23, 24
    Satellite receiver 19
    VCR 14-18
    VCR with satellite receiver 20
Contents of box 3
CONTROL S 26
Controls and connections 8
Converter 12

D

Demo, menus 49
Display button 5
Display, turning off 5
DVD player
    using with TV remote control 54
    with A / V connectors, connecting 24
    with component video connectors, connecting 23

E

Enhanced picture resolution 48
Extended Data Service 48

(Continued on the next page)

Downloaded from www.Manualslib.com manuals search engine

F

Favorite Channel
setting up 42
using 30
Favorites button 30
features 2
Front Panel controls 8

G

Guide button 5

H

headphones, see wireless headphones
Hookups 10-26
hue, adjusting 38

I

inputs, labeling 49

J

Jump button 5

L

label
channels 43
video inputs 49
Languages, setting for closed captioning 49
Locking programs 44

M

Manufacturer's Codes 53
MDP, using with TV remote control 55
Menu button 5
menus
Audio 37, 40
Basic 37, 50
Channel 37
Channel Setup 42
Parent 37
Parental Control 44
Setup 37, 48
Timer 37, 47
Video 37, 38
MTS 5, 40
Muting 4

P

Parent menu 37, 44
parental control, described 2
password
changing 44
picture contrast, adjusting 38
picture definition, adjusting 39
Picture in Picture (PIP), using 31
picture, adjusting 50
Picture Mode 4
Picture size, adjusting in PIP 32
power cord, removing from holder 7
presetting channels 42
problems, troubleshooting 56-57

R

ratings, setting 44-45
ratings, viewing blocked programs 45, 46
Rear panel controls and connections 8-9
remote control
described 4-5
inserting batteries 3
programming 52
Remote control, buttons inside flap 5
Remote control, operating other components wtih
VCR 54
MDP 55
Satellite receiver 55
DVD 54
Cable box 55
Removing channels from the channel list 42
Reset button 5
resetting
Audio options 40
Timer options 47
Video options 38

S

Safety ii, iii, iv
SAT/CABLE power button 4
SAT/CABLE function button 4
satellite receiver, using with TV remote control 55
Setting favorite channels 42
setting up channels 27
Setup menu 37, 48

Downloaded from www.Manualslib.com manuals search engine

sharpness, adjusting 38
Sleep timer / button 4
sound effect (3-D), adjusting 40, 50
speakers
  turning on / off 40
  using external speakers 40
specifications 58-59
Steady Sound, adjusting 40
Steady Sound, described 2
surround sound 40, 50

T

tape-to-tape editing 18
tilt, correcting 49
Time,
  set current 47
  set daylight savings 47
Timer menu 37, 47
Timer setting 47
treble, adjusting 40
troubleshooting 56-57
TV function button 4
TV power button 4
TV / VIDEO button 4

V

VCR
  connecting two, for tape editing 18
  using with TV remote control 54
  with cable box, connecting 15
  with cable, connecting 14
  with satellite receiver, connecting 20
VCR / DVD power button 4
VCR / DVD function button 4
Velocity Modulation 2, 39
video inputs, labeling 49
Video menu 37, 38
Video Modes, selecting 38

W

Wega, described 2
widescreen 49
widescreen, described 2
wireless headphones 34-36

Downloaded from www.Manualslib.com manuals search engine

PRINTING THE SERVICE MANUAL

The PDF of this service manual is not designed to be printed from cover to cover. The pages vary in size, and must therefore be printed in sections based on page dimensions.

NON-SCHEMATIC PAGES

Data that does NOT INCLUDE schematic diagrams are formatted to 8.5 x 11 inches and can be printed on standard letter-size and/or A4-sized paper.

SCHEMATIC DIAGRAMS

The schematic diagram pages are provided in two ways, full size and tiled. The full-sized schematic diagrams are formatted on paper sizes between 8.5" x 11" and 18" x 30" depending upon each individual diagram size. Those diagrams that are LARGER than 11" x 17" in full-size mode have been tiled for your convience and can be printed on standard 11" x 17" (tabloid-size) paper, and reassembled.

TO PRINT FULL SIZE SCHEMATIC DIAGRAMS

If you have access to a large paper plotter or printer capable of outputting the full-sized diagrams, output as follows:

1) Note the page size(s) of the schematics you want to output as indicated in the middle window at the bottom of the viewing screen.

2) Go to the File menu and select Print Set-up. Choose the printer name and driver for your large format printer. Confirm that the printer settings are set to output the indicated page size or larger.

3) Close the Print Set Up screen and return to the File menu. Select "Print..." Input the page number of the schematic(s) you want to print in the print range window. Choose OK.

TO PRINT TILED VERSION OF SCHEMATICS

Schematic pages that are larger than 11" x 17" full-size are provided in a 11" x 17" printable tiled format near the end of the document. These can be printed to tabloid-sized paper and assembled to full-size for easy viewing.

If you have access to a printer capable of outputting the tabloid size (11" x 17") paper, then output the tiled version of the diagram as follows:

1) Note the page number(s) of the schematics you want to output as indicated in the middle window at the bottom of the viewing screen.

2) Go to the File menu and select Print Set-up. Choose the printer name and driver for your printer. Confirm that the plotter settings are set to output 11" x 17", or tabloid size paper in landscape (▭) mode.

3) Close the Print Set Up screen and return to the File menu. Select "Print..." Input the page number of the schematic(s) you want to print in the print range window. Choose OK.

TO PRINT SPECIFIC SECTIONS OF A SCHEMATIC

To print just a particular section of a PDF, rather than a full page, access the Graphics Select tool in the Acrobat Reader tool bar.

1) To view the Graphics Select Tool, press and HOLD the mouse button over the Text Select Tool which looks like:
This tool will expand to reveal to additional tools.
Choose the Graphics Select tool by placing the cursor over the button on of the far right that looks like:

2) After selecting the Graphics Select Tool, place your cursor in the document window and the cursor will change to a plus (+) symbol. Click and drag the cursor over the area you want to print. When you release the mouse button, a marquee (or dotted lined box) will be displayed outlining the area you selected.

3) With the marquee in place, go to the file menu and select the "Print..." option. When the print window appears, choose the option under the section called "Print Range" which says "Selected Graphic".

Select OK and the output will print only the area that you outlined with the marquee.

(continued >)

Downloaded from www.Manualslib.com manuals search engine

ON-SCREEN SEARCH OPTION

All of the text within the service manual PDF is content searchable. This means that you can enter any text, word, phrase or reference number that appears in the manual, and the PDF software will search, find and move the cursor to the location where you requested text first appears. This feature can be particularly useful in locating components on a specific schematic or printed wire circuit board (PWB) diagrams.

Follow these steps to effectively locate a component on a schematic diagram:

1) Locate the schematic you want to search by clicking on the corresponding bookmark on the left side of the screen. The view on the right of the screen will then jump to the desired schematic page.

2) Magnify the diagram to at least 400% before conducting a component search. This will enable you to easily view the reference number when it is highlighted on screen. To do this, click on the magnifying glass button on the tool bar at the top of the screen. Move the cursor over the diagram and RIGHT click you mouse. Select the 400% magnification option on the pop-up menu. Click on the button with the icon of the open hand to deactivate the magnification tool

3) Search the diagram (or the entire manual) by clicking on the binocular button tool at the top of the screen. The “Find” window will appear and allow you to type in your desired text. Type in a reference designator, such as R502, and click on the “Find” button. If the component is not on the diagram, but is listed anywhere else in the manual, the cursor will jump to the first location the text is found in the file. To find another instance of that same text, click on the binocular button again and select “Find Again.”

Downloaded from www.Manualslib.com manuals search engine