Commodore

ESCO
European Support & Coordination Office
Technical Support

Lyoner Str. 38 • W-6000 Frankfurt/Main 71 • Germany • Tel. +49 69 6638-0 • Fax +49 69 6638-229

A4000T/40

Advance Engineering Release #310

Document distributed April 28, 1993

Contents

365149	Schematic, PCB
365150	PCB Assembly
365276	Functional Specification
365277	Drawing Tree
365255	Schematic, Disk Module
365257	PCB Assembly, Disk Module
365259	Schematic, A4000 Aud/Video
365261	PCB Assembly, A4000 Aud/Video
365309	Door Window

For further information, questions etc. you are welcome to contact:

Name	Responsibility	Email	cc:Mail	Phone
Jan Nymand	Amiga Product Range	cbmehq!nymand	Jan Nymand at CBM-ESCO	+ 49 (0) 69 66 38 221
Allan Holchen	PC Product Range	cbmehq!holchen	Allan Holchen at CBM-ESCO	+ 49 (0) 69 66 38 249
Thomas Giger	OEM, Administration	cbmehq!giger	Thomas Giger at CBM-ESCO	+ 49 (0) 69 66 38 202
Martina Unruh	Document Requests etc.	cbmehq!unruh	Martina Unruh at CBM-ESCO	+ 49 (0) 69 66 38 175

365310	Bezel, Door
365311	Nameplate
365312	Bezel, Front
365313	FDD Assembly (sheet 3 n/a)
365314	HDD Assembly (sheet 3 n/a)
365316	Bezel Assembly (sheet 3 n/a)
365317	Main Assembly (sheet 3 n/a)
365318	Main Chassis Sub Assembly (reference only)
365335	Schematic, A4000T Ports Module
365337	PCB Assembly, A4000T Ports Module
365347	Option Card Bracket
365348	Option Card Bracket
369644	Rating Label
534810	Shipping Assembly (sheet 3 n/a)
582028	Keyboard Shipping Assembly

APPLICATION		REVISION			
NEXT ASSEMBLY	USED ON	LTR	DESCRIPTION	DATE	APPROVED
	A4000T	A	SPECIFICATION RELEASE	4/22/93	G.C.B

1.0 DESCRIPTION

The A4000T computer is a new member of the Amiga 4000 family, based on the AA chip set . It is housed in a tower case with a separate keyboard. Expansion capabilities are provided via five internal Zorro II/III expansion connectors, four PC/AT slots, two video slots, and a CPU slot.

A functional block diagram is shown in Figure 1.

1.1 ELECTRICAL SPECIFICATIONS

1.1.1 CPU

The CPU for the A4000T is contained on a separate CPU card (occupying the CPU slot) which can be used with a 25 Mhz 68040 or 68LC040 processor. When a 68040 processor is used, it resides in a PGA socket. Future CPU cards may contain RAM and/or other expansion devices/processors.

COMMODORE P. N.	STATUS
365276-01	ACTIVE

UNLESS OTHERWISE SPECIFIED DIMENSIONS ARE IN MILLIMETERS.
TOLERANCES:
ANGLES +/- 1 DEGREE
2 PLACE DECIMALS +/- 0.50
3 PLACE DECIMALS +/- 025

DRAWN A. Young	A. Young	DATE 4/22/93
SYSTEM ENG.		DATE
TEST ENG		DATE
COMP. ENG Drew Shannon		DATE
CIRCUIT ENG.		DATE

COPYRIGHT 1993
COMMODORE ELECTRONICS LTD
INFORMATION CONTAINED HEREIN IS THE UNPUBLISHED AND CONFIDENTIAL PROPERTY OF COMMODORE ELECTRONICS LIMITED. USE, REPRODUCTION OR DISCLOSURE OF THIS INFORMATION WITHOUT THE PRIOR WRITTEN PERMISSION OF COMMODORE IS STRICTLY PROHIBITED. ALL RIGHTS RESERVED.

Commodore
1200 WILSON DRIVE
WEST CHESTER, PA. 19380
(215) 431-9100

TITLE:
FUNCTIONAL SPECIFICATION, A4000T

SIZE	DRAWING NUMBER
A	365276
SCALE	SHEET 1 OF 23

ILLUSTRATION TO BE FURNISHED

FIGURE 1
Functional Block Diagram

Commodore			TITLE: FUNCTIONAL SPECIFICATION, A4000T	
SIZE	DRAWING NUMBER: 365276	REV.: A	SCALE	SHEET 2 OF 23

1.1.2 FAST RAM

- Up to 16 Megabytes
- 4 72 pin SIMM sockets
- 32 bit CPU interface
- Page or Static Column mode
- 80 nsecs

The SIMMs are 72 pin JEDEC standard. Many 72 pin SIMMs are 36 bits wide. This machine requires only 32 bits of data. If a 36 bit SIMM is used, then the extra 4 bits are simply ignored.

FASTRAM is controlled by the same RAMSEY chip used in the A3000 and A4000. RAMSEY was designed to terminate cycles via *STERM.

BURST mode is functional for FASTRAM. It is desirable to have this turned on. The test for static column DRAMs should be left in the ROM, and the BURST bit turned on just as is done with the A3000. However, the test for static column DRAMs must be done differently. Instead of writing four longwords with the static column bit set, and then reading them back with it off, the four longwords should be written with the bit set off, and then read back with it turned on. This is necessary because JEDEC standard SIMMs do not make use of an output enable (*OE) pin for the DRAMs. When static column mode is turned on, all writes to the DRAM are done as late writes. Without the *OE pin, the SIMMs cannot do late writes. The test will fail, indicating the correct result, but more significantly the data being written to the DRAMs will collide with data coming out of them, which is undesirable. Static column SIMMs must be custom made. One of the no connect pins will be assigned to act as the *OE pin. Only after it is determined that the DRAMs are the static column type should a write to DRAM in static column mode EVER be allowed.

If static column DRAMs are installed, PAGE MODE operation is functional as well (when the bit is turned on). FAST RAM SIMM types usable with the A4000T are:

1MB SIMM = 256k x 32/36
4MB SIMM = 1M x 32/36

Double-sided SIMMs (2MB or 8MB) may be used in SIMM S351 and S353. The second side of the SIMM is seen as the electrical equivalent of another single-sided SIMM installed in SIMM slots 2 and 4 respectively. However, the maximum memory addressed is the same whether four single-sided or two double-sided SIMMs are used (4MB with 1MB or 2MB SIMMs or 16 MB with 4MB or 8MB SIMMs). Thus there is no advantage to using double-sided SIMMs over the single-sided type.

A jumper is provided on the motherboard to indicate SIMM size.

	SIMM Size
J300	Size
2-3	1MB (or 2MB)
1-2	4MB (or 8MB)

FAST RAM SIMM configurations usable with the A4000T are:

TOTAL FASTRAM	ADDRESS	SIMM CONFIGURATIONS
1 MB	07f00000-07ffffff	1 1MB SIMM (S351)
2 MB	07e00000-07ffffff	2 1MB SIMMs (S351, S352)
		1 2MB SIMM (S351)
3 MB	07d00000-07ffffff	3 1MB SIMMs (S351, S352, S353)
		1 2MB SIMMs (S351) + 1 1MB SIMM (S353)
4 MB	07c00000-07ffffff	4 1MB SIMMs (S351, S352, S353, S354)
		2 1MB SIMMs (S351, S352) + 1 2MB SIMM (S353)
		2 2MB SIMMs (S351, S353)
		1 4MB SIMM (S351)
8 MB	07800000-07ffffff	2 4MB SIMMs (S351, S352)
		1 8MB SIMM (S351)
12 MB	07400000-07ffffff	3 4MB SIMMs (S351, S352, S353)
		1 8MB SIMM (S351) + 1 4MB SIMM (S353)
16 MB	07000000-07ffffff	4 4MB SIMMs (S351, S352, S353, S354)
		2 4MB SIMMs (S351, S352) + 1 8MB SIMM (S353)
		2 8MB SIMMs (S351, S353)

Notes: SIMM slots must be populated in order from S351 to S354.
Double-sided SIMMs (2MB or 8MB) are permitted to reside in slots 1 and 3 only.
Only 1MB + 2MB, or 4MB + 8MB SIMMs may be mixed.

1.1.3 CHIP RAM

- 2 Megabytes
- 32 bit CPU interface
- 32/16 bit CHIP interface
- 80 nsecs

The base machine will contain 2 MB of CHIP RAM on the motherboard. The 2 MB of CHIPRAM appears at address $0000000-01fffff.

1.1.4 ROM

Sockets are provided on the motherboard for two (128k x 16 or 256k x 16) ROMs. ROM appears at address $0f80000-0ffffff and 0e00000-0e7ffff. A jumper is provided on the motherboard to adjust ROM speed. ROM jumper settings shall be as follows:

J151	CPU cycles	Tacc
2-3	5	160 nsecs
1-2	6	200 nsecs

Writes to the ROM address range will cause a bus timeout to occur.

1.1.5 REAL TIME CLOCK

- Ricoh RTC with 26 x 4 bit battery backed RAM
- The A4000T uses the same Ricoh RTC as in the A3000 and A4000.

1.2 FLOPPY DISK DRIVES

- 1 internal 3.5" floppy drive standard
  2 speed, high density, 1.7M formatted
  half-height drive = P/N 313248-03 (32mm)
  low-profile drive = P/N 365019-01 (25mm)
- Up to 2 internal floppy disk drives (df0: & df1:)

A single 1.7M internal floppy disk drive comes installed in the machine. The circuitry on the motherboard can support two internal drives. The standard disk is installed in the topmost drive bay. A second drive can be added in the bay below it. The 3.5" floppy disk drive requires an adaptor bracket to allow mounting in the 5.25" drive bay.

The internal floppy connector is wired such that df0: is connected before the twist in the floppy cable wire. df1: would be after the twist. If an 880K drive is used as df1:, the jumper on the disk module (J250) must be installed (or set).

1.3 HARD DISK DRIVES

The A4000T supports both SCSI and IDE hard drive interfaces.

Hard drives can be installed in any of the available drive bays. Half height hard disk drives can be mounted in the four bays in the front of the machine (below the floppy). In addition, a single full-height, or two half-height hard disk drives can be installed alongside the power supply in the back of the machine.

Drive bays: Externally accessible --
Three horizontal bays for 5.25" half-height devices (adaptable for 3.5" devices)
(one populated with a 3.5" 1.76MB dual-speed high-density floppy disk drive)
Two vertical bays for 5.25" half-height devices (adaptable for 3.5" devices)

Internally accessible --
One vertical bay for 5.25" full-height devices (adaptable for 3.5" devices)

3.5" hard disk drives (or other peripherals) require an adaptor bracket to allow mounting in the 5.25" drive bays.

1.3.1 SCSI CONTROLLER

- Built-in 16-bit SCSI-2 controller
- Supports 7 internal and/or external SCSI devices (disk module)
- Supports SCSI-2 FAST mode
- External switch for motherboard SCSI termination

The SCSI host controller utilizes the NCR53C710 SCSI host adaptor chip, which includes FIFOs for both SCSI and host bus interfaces. It has full MC68030/040 compatible bus-mastering capability for high-speed 32-bit transfers anywhere in the 32-bit Amiga memory map at rates up to 22 MB/s. The SCSI controller features full SCSI-2 support, configurations for internally and externally based SCSI devices, and dipswitch enable/disable of the mother board-based SCSI-2 active termination. The dip-switch is accessible at the A4000T rear panel on the disk module bracket.

The control registers for the NCR53C710 chip are 32 bits wide. The Gary chip asserts the cache inhibit line, CINH*, for all 53C710 and all other I/O registers. The registers are read-only in the address range $00DD040 to $00DD007F and appear as write-only in the addresses $00DD00C0 to $00DD00FF.

The options register, which is read-only, occupies the lower byte of the longword at $00DD0100. Bits 7-0 reflect the settings of board dipswitch SW200. Software can use these switches to set a SCSI host address and DMA user option setting. Bit 7 reflects the enable SCSI-2 active termination bit of the 8-position dipswitch.

Shown below is a table that gives addresses for all registers related to the SCSI sub-system.

	A13	A12	A8	A7	A6	Address	Function
SCSI	0	0	0	0	1	$0DD0040	SCSI read only registers
	0	0	0	1	1	$0DD00C0	SCSI write only registers
	0	0	1	X	1	$0DD0100	SCSI ID registers
IDE	(!0)	(!0)	X	X	X	$0DD1XXX	IDE registers decoded

Note that A6 must be high for all accesses. This is because contention with RAMSEY ($00DD000C) results if this is not done.

SCSI hard disk drive P/Ns are: 364680 for 120 MB, 364825 for 240 MB, and 365363 for 535 MB.

1.3.1.1 DIPSWITCH CONFIGURATION

The dipswitch configuration is as follows (default setting for all switches is OFF):

Switches 1, 2, and 3 (SCSI address switches): These switches determine the SCSI bus address for the SCSI controller. This should usually be set to device 7. Settings for switches 1, 2, and 3 establish SCSI addresses 0 through 7 as shown in Table I. Add-on SCSI devices must be set to a unique SCSI address other than the mothrboard SCSI controller's address

Switch 4 (SCSI fast bus switch): This is set to OFF to enable the SCSI fast bus.

Switch 5 (Short/long switch): This is set to OFF to recognize that the system uses standard booting time.

Switch 6 (synchronous mode switch): This is set to OFF to indicate that the synchronous mode feature is enabled.

Switch 7 (external SCSI termination switch): When set to OFF, this indicates that no devices are installed. When set to ON, it indicates that external SCSI devices are installed. Then external termination must be set. The last SCSI device in the chain must be terminated per manufacturer's documentation and terminators on other devices must be removed or deactivated.

Switch 8 (logical unit enable switch): When set to OFF, this indicates that unit 0 is the only unit recognized. When set to ON, this enables the system to recognize units 1 through 6 as logical units (LUNs).

TABLE 1
Dipswitch Settings for SCSI Addresses

SCSI Address	Switch Settings	Switches 1-3
0	1: ON 2: ON 3: ON	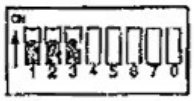
1	1: OFF 2: ON 3: ON	
2	1: ON 2: OFF 3: ON	
3	1: OFF 2: OFF 3: ON	
4	1: ON 2: ON 3: OFF	
5	1: OFF 2: ON 3: OFF	
6	1: ON 2: OFF 3: OFF	
7 (default)	1: OFF 2: OFF 3: OFF	

1.3.2 IDE CONTROLLER

- Built in 16 bit IDE interface (internal connections only)
- 2 drive support

An internal 40 pin connector is provided for the addition of up to two 16 bit AT IDE compatible hard disk drives.

The IDE (AT) hard drive requires two mutually exclusive chip selects. Refer to the following tables for address range in which each is active. The state machine shown (Figure 2) is used for IDE accesses. Note that consecutive accesses cannot be performed nearly as fast as a single access. This would suggest that the optimum algorithm for access of IDE data would consist of single accesses of IDE data interleaved with single accesses of the target/source data buffer.

Data register accesses can be performed faster than control register accesses. Accesses to the control registers are called "8 bit accesses" while those to the data register are called "16 bit accesses". Shown below is a table that gives addresses for all registers related to the IDE sub-system.

	A13	A12	A5	A1	Address	Function
SCSI	0	0	X	X	$0DD0040	SCSI registers decoded
IDE	0	1	1	0	$0DD1XX0	Reserved for mode register 0
	0	1	1	1	$0DD1XX2	Reserved for mode register 1
	1	0	1	0	$0DD2XX0	_CS1, 16 bit speed
	1	0	1	1	$0DD2XX2	_CS1, 8 bit speed
	1	1	1	0	$0DD3XX0	IDE interrupt register
	1	1	1	1	$0DD3XX2	_CS2, 8 bit speed

Note that A5 must be high for all accesses. This is because contention with RAMSEY results if this is not done.

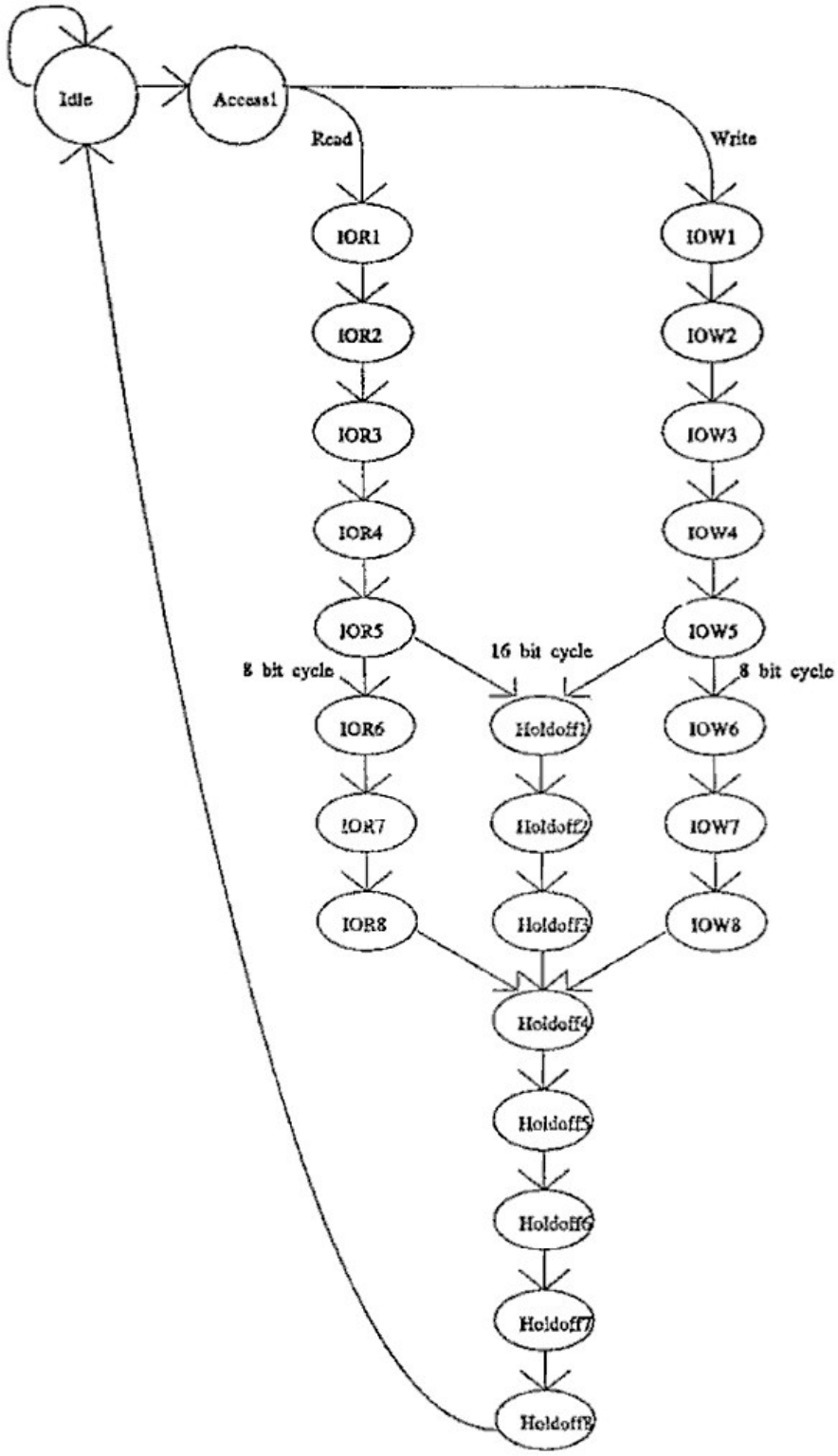

FIGURE 2
STATE MACHINE

Commodore			TITLE: FUNCTIONAL SPECIFICATION, A4000T	
SIZE	DRAWING NUMBER: 365276	REV.: A	SCALE	SHEET 10 OF 23

The disk drive address lines DA0, DA1, and DA2 are connected to processor address lines A2, A3, and A4 respectively. This results in the following memory map:

A1000 address	Addr on AT address	Valid Data	Read Function	Write Function
$0DD1020	-	D31	None	Mode Reg0 (reserved)
$0DD1022	-	D31	None	Mode Reg1 (reserved)
$0DD3020	-	D31	IDE int reg	None
$0DD303A	3F6	8 bits	Alternate Status	Device Control
$0DD303E	3F7	8 bits	Drive address	Not used
$0DD2026	1F1	8 bits	Error Register	Features
$0DD202A	1F2	8 bits	Sector Count	Sector Count
$0DD202E	1F3	8 bits	Sector Number	Sector Number
$0DD2032	1F4	8 bits	Cylinder Low	Cylinder Low
$0DD2036	1F5	8 bits	Cylinder High	Cylinder High
$0DD203A	1F6	8 bits	Drive/Head	Drive/Head
$0DD203E	1F7	8 bits	Status	Command
$0DD2020	1F0	16 bits	Data	Data

Locations $0DD1020 and $0DD1022 are reserved for the mode registers. These are currently not implemented. When implemented, they will allow faster transfer rates from hard drives that support such rates. Part of the ID of a drive is information that allows the driver to decide which 'mode' is the fastest that the drive supports. Modes are defined as follows:

Mode Reg1	Mode Reg0	Mode type	Max. transfer rate
0	0	mode 0	3.3 MB/sec
0	1	mode 1	5.2 MB/sec
1	0	mode 2	8.3 MB/sec
1	1	Undefined	

As currently implemented, only mode 0 is available.

Location $0DD3000 contains the IDE interrupt register. This register returns a value of 1 if an interrupt is pending from the IDE hard disk, and a value of 0 if an interrupt is not pending from this source. Writing to this register has no effect.

The A4000T supports four different timings for IDE drive access. They represent reads and writes at 8 and 16 bit transfer widths. These timings are shown in Figures 3 through 6

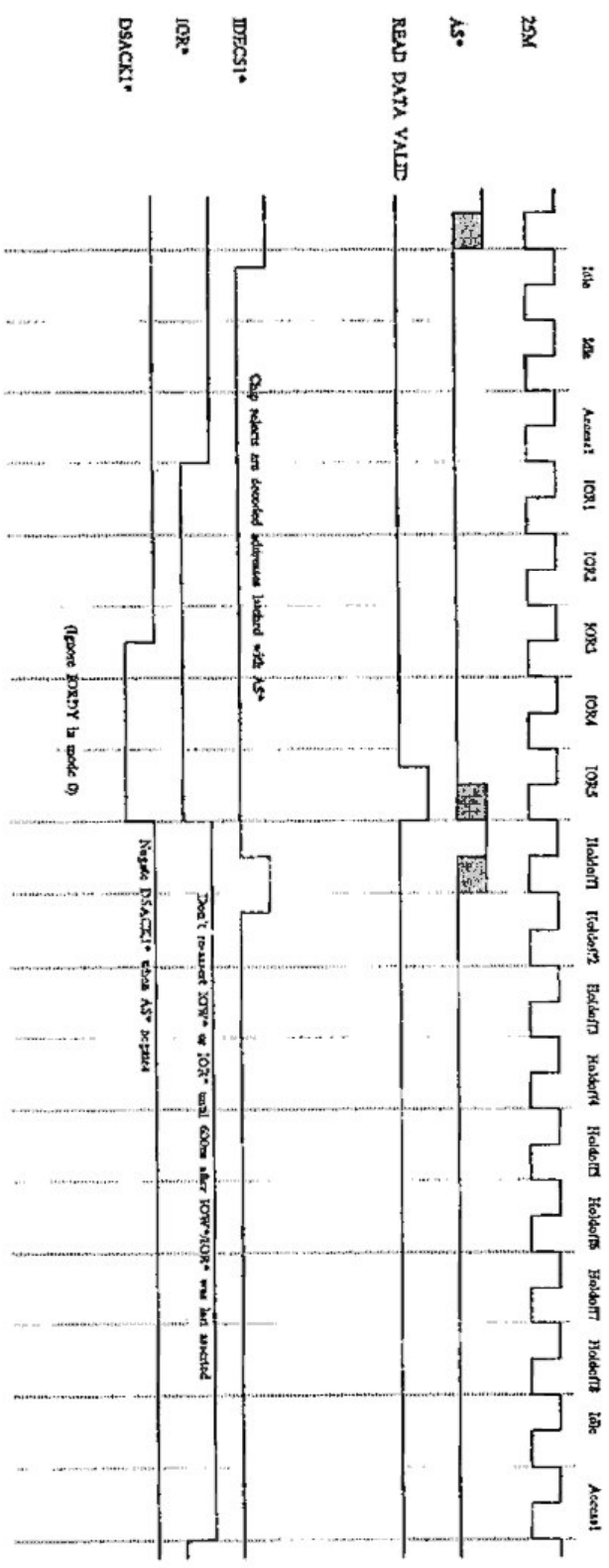

FIGURE 3
Timing Diagram
Mode 0, Read 16 Bit Tansfer

Commodore			TITLE FUNCTIONAL SPECIFICATION, A4000T	
SIZE	DRAWING NUMBER 365276	REV. A	SCALE	SHEET 12 OF 23

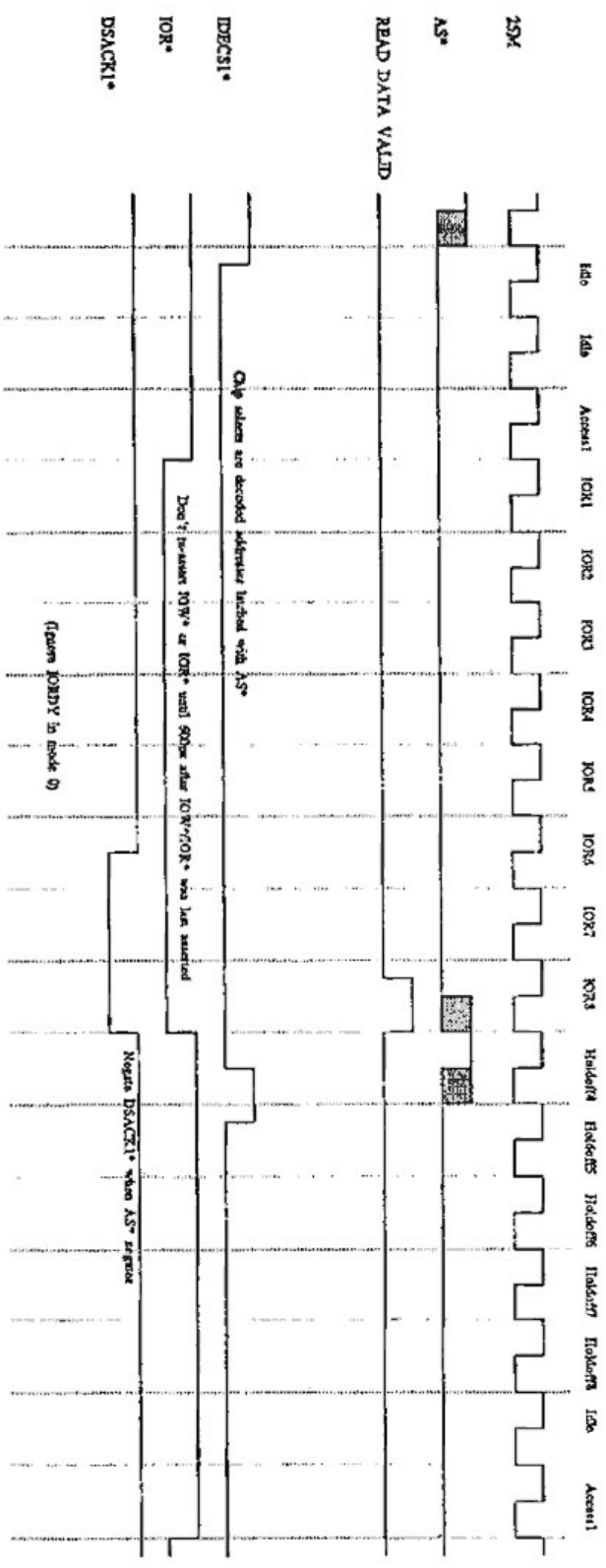

FIGURE 4
Timing Diagram
Mode 0, Read 8 Bit Transfer

Commodore	TITLE: FUNCTIONAL SPECIFICATION, A4000T			
SIZE	DRAWING NUMBER: 365276	REV.: A	SCALE	SHEET 13 OF 23

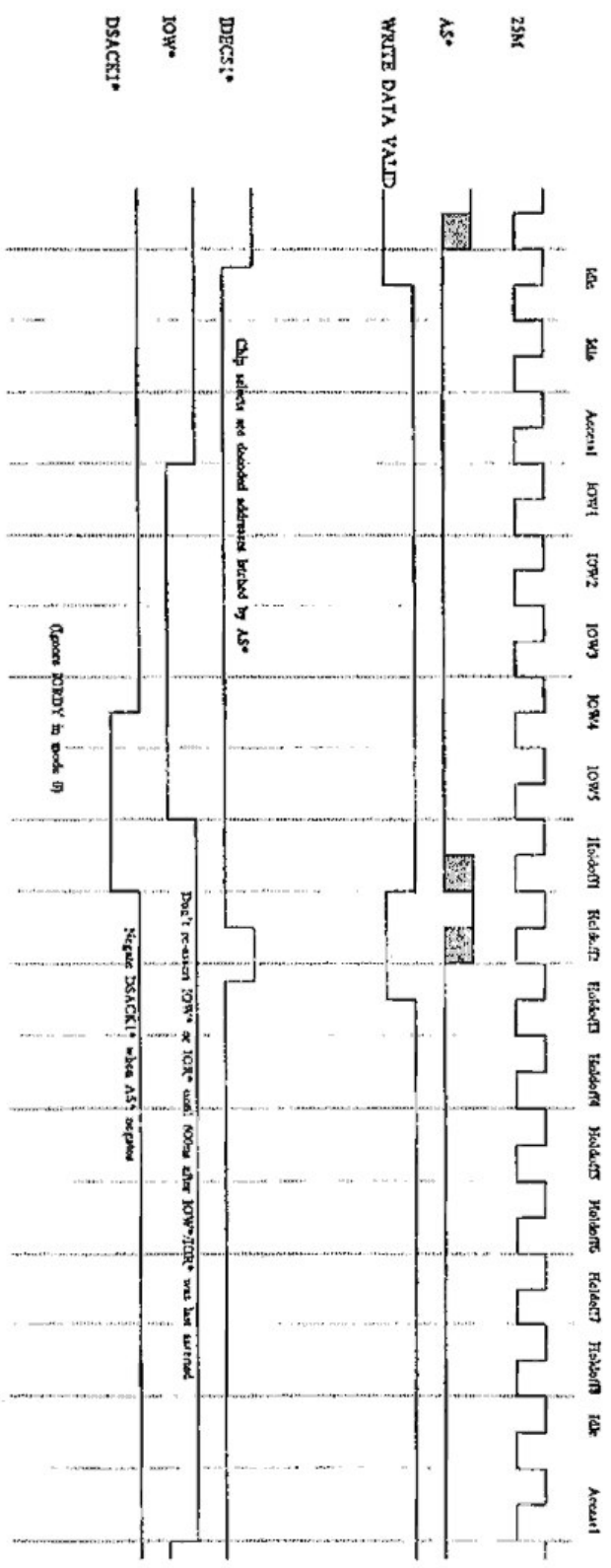

FIGURE 5
Timing Diagram
Mode 0, Write, 16 Bit Transfer

Commodore	TITLE: FUNCTIONAL SPECIFICATION, A4000T			
SIZE	DRAWING NUMBER: 365276	REV.: A	SCALE	SHEET 14 OF 23

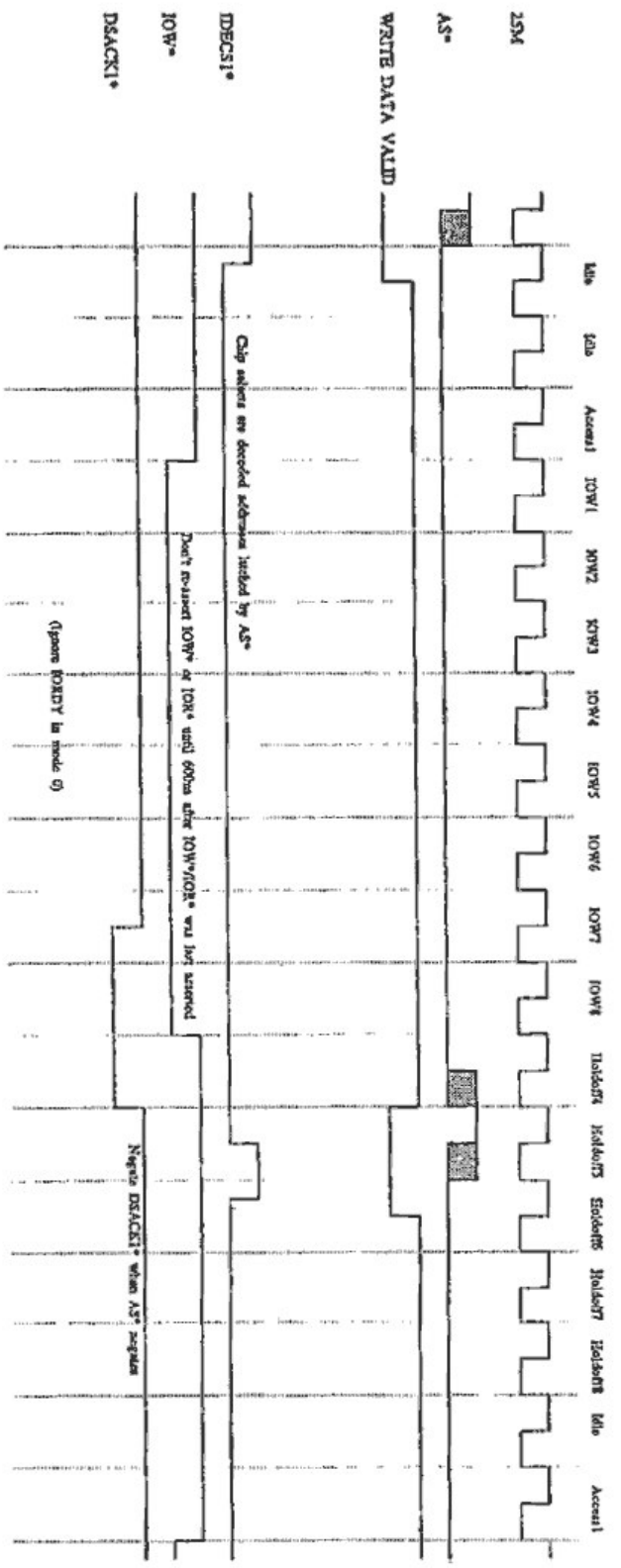

FIGURE 6
Timing Diagram
Mode 0, Write, 8 Bit Transfer

Commodore	TITLE: FUNCTIONAL SPECIFICATION, A4000T			
SIZE	DRAWING NUMBER: 365276	REV.: A	SCALE	SHEET 15 OF 23

1.4 AUDIO

The A4000T includes an internal speaker. A mute switch and LED indicator for this speaker are mounted on the front panel.

Two external RCA jacks are provided for stereo audio output (pre-amp levels). Right and left channels are shorted together to provide combined monaural audio if only a single RCA plug is installed. Separate right and left stereo is provided when male RCA plugs are inserted into the BOTH of the RCA jacks.

A stereo headphone jack, with sound processed separately, is also provided. It is located above the RCA jacks on the audio/video module bracket.

External audio IN is provided on pin 18 of the RS232 DB25 connector. This audio is mixed into the right channel. Audio OUT is also provided on the DB25 connector on pin 11, which is sent from the left audio channel.

An internal connector on the PCB allows for additional Right and Left audio to be mixed in. This allows internal expansion devices (such as a CD/DSP) to provide stereo audio as well.

1.5 KEYBOARD

A full size detachable keyboard with a keypad is used (P/N 365374-01 through -99). This is the same keyboard as is used with the A4000 with one modification: The A4000T uses a 5-pin DIN connector (as is used on the A3000/A3000T).

1.6 MOUSE

A high-resolution (400 DPI) two-button mouse (P/N 313254-03 or -04), as used on the A3000T, is provided.

1.7 EXPANSION SLOTS

The A4000T includes the following expansion slots (refer to Figure 7):

- 5 ZORRO II/III expansion card slots
- 2 video slots in line with 2 ZORRO slots
- 3 PC/AT slots in line with three of the Zorro slots
- 1 additional PC/AT-only slot
- 200 pin processor connector

Five expansion card slots are provided. The two top slots contain a 100 pin ZORRO II/III compatible connector in line with the two 2-connector video slots. The remaining three slots have both ZORRO II/III and IBM PC/AT connectors. A PC/AT-only slot is also provided on the bottom.

Video cards that were designed for the A2000 have certain limitations in this casework. In the A3000 we provided an adapter bracket that allowed boards designed for the A2000 video slot to be used in the A3000. It attached to the large flat metal bracket on the video card. This allowed it to be connected to a standard expansion slot opening. In the A4000T, however, there is not enough room for the old bracket to remain (it sticks out the side of the box). Consequently, the old video slot bracket must be removed from the video card, and a new 'custom' bracket installed. This bracket is custom to each video card, and must be provided by each of the separate manufacturers since the location of the mounting holes is not standard.

A 200 pin KEL connector is provided on the motherboard which provides direct access to the processor bus signals. This connector is physically and electrically compatible with the coprocessor slot of the A3000 and A4000. Since no processor exists on the motherboard of the A4000T, this processor slot must be occupied by a CPU card for the machine to function. However, different CPU cards can be plugged into this slot in order to alter or enhance the system (such as future processors, or coprocessors).

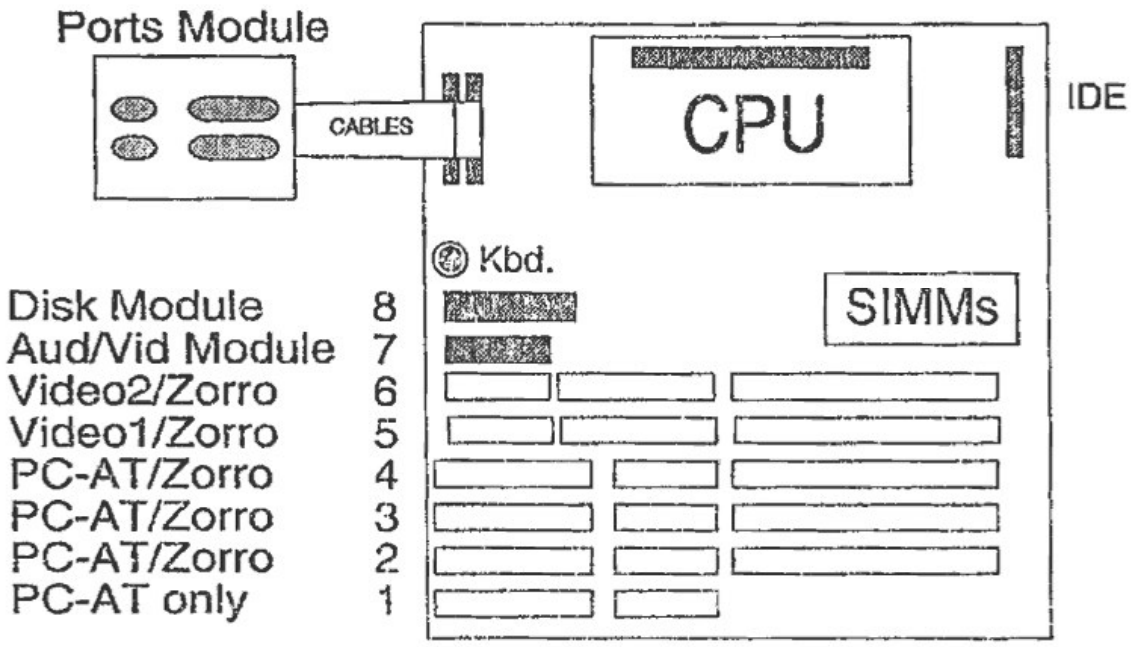

FIGURE 7
Expansion Slots

CASEWORK CONNECTORS

Motherboard:	
keyboard:	5 pin DIN
internal CPU Module	KEL 200 pin
internal IDE HDD	40 pin DIL
Ports Module:	
parallel port	DB25F
serial port	DB25M
mouse/joysticks	2 DB9M
Audio/Video Module:	
video	DB23F
R/L audio	2 RCA jacks
headphone jack	mini stereo jack
Disk Module:	
external SCSI-2	HD50F
internal SCSI-2 HDD	50 pin DIL header
internal FDD	34 pin DIL header

1.8 MEMORY MAP

00000000-001FFFFF	2 MB	CHIP RAM (ROM at 0F80000 gets mapped to 0000000-0FFFFFF during overlay)
00200000-009FFFFF	8 MB	ZORRO II expansion space
00A00000-00BFFFFF	1.5 MB	ZORRO II expansion space
00B80000-00BFCFFF	448 KB	not used
00BFD000-00BFDFFF	4 KB	CIA #1
00BFE000-00BFEFFF	4 KB	CIA #0
00BFF000-00BFFFFF	4 KB	
00C00000-00CFFFFF	1 MB	Chip register shadow
00D00000-00D9FFFF	640 KB	unused
00DA0000-00DAFFFF	64 KB	
00DB0000-00DBFFFF	64 KB	unused
00DC0000-00DCFFFF	64 KB	Real time clock
00DD0000-00DD0FFF	4 KB	SCSI registers (buried DMAC/Ramsey)
00DD1000-C0DD3FFF	12 KB	IDE registers
00DD4000-00DDFFFF	48 KB	unused
00DE0000-00DE7FFF	32 KB	RAMSEY/GARY registers (supervisor space)
00DE8000-00DEFFFF	32 KB	unused
00DF0000-00DF7FFF	32 KB	unused
00DF8000-00DFBFFF	16 KB	Auxilliary interrupt control
00DFC000-00DFFFFF	16 KB	Chip registers
00E00000-00E7FFFF	512 KB	System ROM
00E80000-00E8FFFF	64 KB	ZORRO II autoconfig space
00E90000-00EFFFFF	512 KB	ZORRO II I/O space
00F00000-00F7FFFF	512 KB	Cartridge space
00F80000-00FFFFFF	512 KB	System ROM
01000000-017FFFFF	8 MB	RESERVED (CHIP RAM expansion)
01800000-06FFFFFF	88MB	reserved (motherboard FASTRAM expansion)
07000000-07FFFFFF	16 MB	motherboard FASTRAM
08000000-0FFFFFFF	128 MB	coprocessor slot expansion
10000000-7FFFFFFF	(~2 GB)	ZORRO III expansion space
80000000-FEFFFFFF	(~2 GB)	reserved
FF000000-FF00FFFF	64 KB	ZORRO III autoconfig space
FF010000-FFFFFFFF		reserved

1.9 ASICs

All ASICs are provided in PLCC packages for surface mounting.

1.9.1 FAT RAMSEY

RAMSEY is the FASTRAM controller that was designed for the A3000. Refer to Fat Ramsey specification 390541.

1.9.2 FAT GARY

FAT GARY is a large 'glue' chip designed for the A3000 which performs a variety of tasks. Refer to Fat Gary specification 390540.

1.9.3 BUSTER

BUSTER is responsible for bus control and arbitration. It can be used in the same fashion as in the A3000, and does not require any additional logic. Refer to Buster specification 390539.

1.9.4 BRIDGET

Bridget is a Gate Array (also used in the A4000) which replaces the following TTL chips: six 74F646's and four 74F245's. This results in reduced cost, reduced real estate and easier routing. BRIDGET can be used unchanged from the A3000 and other ECS/AA designs. BRIDGET was created with NCR's technology and processing. This was necessary for two reasons: pin count and speed. Refer to Bridget specification 391380.

1.9.5 PAULA

PAULA performs several functions such as 8 bit audio with four voices configured as two stereo channels, floppy disk I/O, RS-232 serial I/O, potentiometer, and interrupt controls.

1.9.6 ALICE

ALICE is the main Amiga Chip bus controller.

1.9.7 LISA

LISA provides 32 bit chip interface and improves video color depth and video output to 24 bits of digital RGB video.

2.0 PHYSICAL REQUIREMENTS

2.1 CASEWORK

The casework used for standard PC compatible towers is used with a custom front bezel with a door. 3.5"-to-5.25" adaptor brackets are provided for the floppy and hard disk drives. These include snap-in slider fixtures on the sides for mounting and locking in the drive bays.

Height: 535.7 mm

Depth: 520 mm

Width: 178.5 mm

Weight: 35 lbs.

Feet: Clamp-on feet are provided for the A4000T. The feet are 270 mm wide and shall not raise the casework more than 20 mm.

Refer to Commodore drawing No. 365318-01 for details of casework and components.

2.2 CONTROLS AND INDICATORS

The following controls and indicators are located on the front bezel:

(Markings shall comply with international ergonomic standards. No LED shall be red.)

Security keylock

Switches :	Power ON Reset Speaker mute
Indicators (LEDs):	Power ON HDD accessing Speaker mute (LED off when mute)

2.3 COLORS

Casework shall be Commodore Limestone Beige (363744-01) except that plastic components, such as the bezel, door, and feet, shall be Commodore Clay Beige (363744-02).

2.4 MARKINGS

A4000T machines shall be marked with an A4000T Amiga logo on the bezel.

2.4.1 RATING LABEL

The A4000T shall carry a label showing power rating and regulatory agency compliance.

2.5 MATERIALS

Casework shall be made of sheet steel except for the bezel, door, and feet, which shall be made of U.L rated (94 V-0) plastics. All plastic parts shall have standard recycling symbol.

2.5.1 HAZARDOUS MATERIALS

No components containing poly-chlorinated byphenyl (PCB) or polybromide shall be used in the A4000T. Any batteries used in the A4000T shall a standard recycling symbol on their exterior.

3.0 POWER SUPPLY

A power supply is required to meet the shape requirements of the case. Refer to Commodore specification 391699 for power supply details.

3.1 INPUT REQUIREMENTS

Input voltage range:	90 to 132 VAC rms (select switch set at 115 V) 180 to 264 VAC rms (select switch set at 230 V) (selectable by external switch)
Input frequency:	47 to 63 Hz
Input current:	6 amps max. @ 115 VAC (involve 1 amp AC output) 3 amps max. @ 230 VAC (involve 0.5 amp AC output)
Inrush current:	40 amps (peak) maximum @ 115 V 80 amps (peak) maximum @ 230 V (at cold start in 25 ° C ambient)
Efficiency:	68% minimum @ full load

3.2 DC OUTPUT REQUIREMENTS

Maximum continuous output power: 250 watts

OUTPUT	+5V	+12V	- 5V	- 12V
Max. load	25.0A	10.0A	0.3 A	0.3 A
Min. load	5.0A	1.0	0 A	0 A
Regulation	+5/- 4%	+5/- 4%	+10/-10%	+10/-9%
Max. voltage	5.25V	12.6V	-5.5V	-13.20V
Min. voltage	4.80V	11.52V	4.5V	-10.92V
Ripple & noise (Max. p-p)	80 mV	120mV	150mV	150mV
Ripple (Max. p-p)	60 mV	80mV	80mV	100mV

3.3 OVERLOAD PROTECTION

The power supply will shut down if significantly more than the rated current is drawn from any of the voltages. Therefore, user voltages available at some of the external connectors are protected. However, since up to 25 amps is available at +5 V, the +5 V current at external connectors is limited by a polyswitch 'fuse'. The polyswitches act like circuit breakers that open up when their maximum rating is exceeded. They automatically reset when the load is removed (after cooling off, which may take 30 seconds or more). A separate polyswitch limits current to the SCSI-2 connectors.

3.4 NO-LOAD OPERATION

Potentially hazardous or damaging conditions shall be prevented even when AC output voltage is applied with no load on any output.

3.5 AC OUTPUT

For monitor input, the AC output voltage is controlled by the main power switch and is the same as the AC input voltage.

AC 115V output: 1 amp max.
AC 230V output: 0.5 amp max.

The 50/60 Hz TICK signal used in some Amigas has been generated in the power supply. In the A4000T power supply, the 8520 counter is connected to the Vertical Sync signal for this purpose (as in the A500).

3.6 POWER SUPPLY CONNECTIONS

CONNECTOR		OUTPUT	WIRE COLOR	WIRE SIZE (AWG)	CURRENT (MAX.)
POWER	P8-1	Power Good	ORN	18	
	P8-2	+5V	RED	18	3.8A
	P8-3	+12V	YEL	18	0.7A
	P8-4	- 12V	BLU	18	0.3A
	P8-5	GND	BLK	18	
	P8-6	GND	BLK	18	
POWER	P9-1	GND	BLK	18	
	P9-2	GND	BLK	18	
	P9-3	+5V	WHT	18	0.3A
	P9-4	+5V	RED	18	3.8A
	P9-5	+5V	RED	18	3.8A
	P9-6	+5V	RED	18	3.8A
HDD and FDD	P6-1	+12V	YEL	20	2.8A
	P6-2	GND	BLK	20	
	P6-3	GND	BLK	20	
	P6-4	+5V	RED	20	1.8A

4.0 REGULATORY REQUIREMENTS

The A4000T complies with the following regualatory agency requirements

USA: UL 478Rev 4/1950 (Electronic Data Processing Units and Systems/ Information Technology Equipment)

FCC CFR47 Part 15 Class B

Canada: CSA 22.2 (Data Processing Equipment, Consumer and Commercial Products)
Canadian DOC Class B

Europe: EN 55022 (EMI) EN60950 (safety)

5.0 ENVIRONMENTAL REQUIREMENTS

Units furnished to the requirements of this specification shall meet the following environmental resistance requirements, per Commodore Engineering Policy #1.02.010, Product Environmental Requirements. Vendors shall furnish supporting documentation upon request. Units shall meet all requirements of this specification after the tests listed here. The list presented here is a summary of some of the requirements.

Operating Temperature	5 °to 40 °C
Operating Humidity	10 to 90% RH non-condensing
Operating Altitude	0 to 3000 meters
Storage Temperature	- 20 °to + 70 °C
Storage Humidity	5 to 95% RH non-condensing
Storage Altitude	0 to 15,000 meters
Storage Shock	20 g's - 11 msec - 1/2 sine wave , two shocks in each of six directions
Storage vibration	Sinusoidal sweep, 1.5 mm full amplitude, 12 minute sweep rate for 10 - 500 - 10 Hz, 2 hours in each axis

5.1 TRANSIT REQUIREMENTS (non-operating/packaged)

Transportation simulation: Per NSTA Pre-shipment Test Procedure Project 1A (0.5mm displacement peak-to-peak at 2-55-2 Hz in each of three mutually perpendicular planes for 7 minutes per cycle for a duration of 30 minutes)

Drop test: Per NSTA Standard (30-inch drops: on one corner and three edges radiating from that corner, and on all faces of the box)

6.0 MINIMUM ACCEPTANCE LEVEL

The minimum acceptance level for any lot will be an AQL of 0.65 as defined by MIL-STD 105 single sampling techniques.

7.0 ENGINEERING CHANGES

Any changes to form, fit, or function shall be made via the formal ECR process.

REVISIONS

LTR	ZONE	DESCRIPTION	DATE	APPROVED
1		ADVANCE ENGINEERING RELEASE	4-22-93	A Bell

UNLESS OTHERWISE SPECIFIED
TOLERANCES ON:
DECIMALS
.X ± .XX ± .XXX ± ∠'S ±

MATERIAL:

FINISH:

DRAWN BY:	DATE
CHKD:	
ENGR:	
APPR:	

USED ON | NEXT ASSY

commodore

SCHEMATIC
A4000T/040 PCB

SIZE		REV
B	365149	1

SCALE | SHEET 1 OF 18

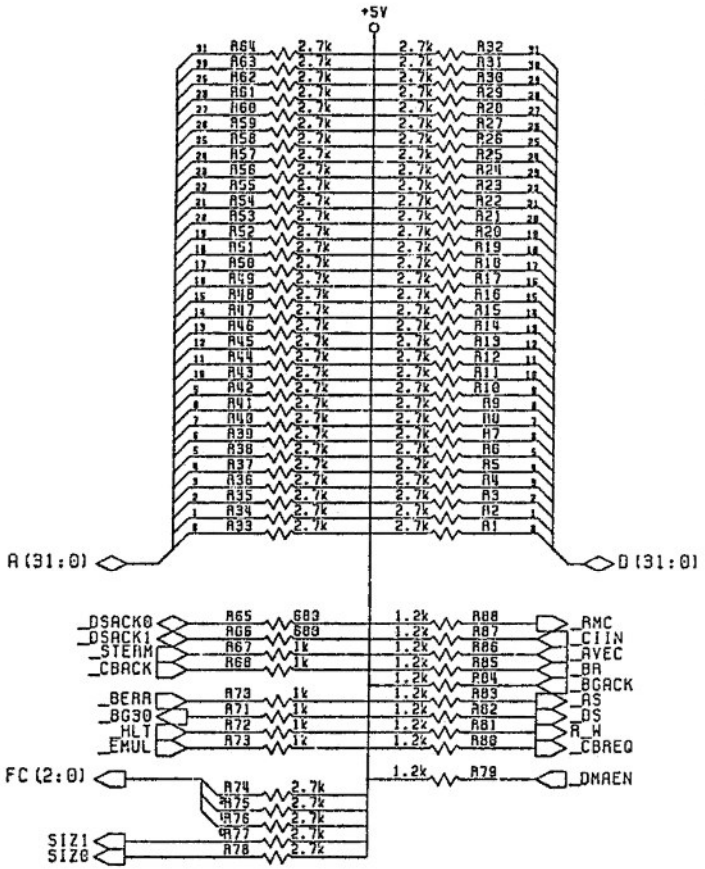

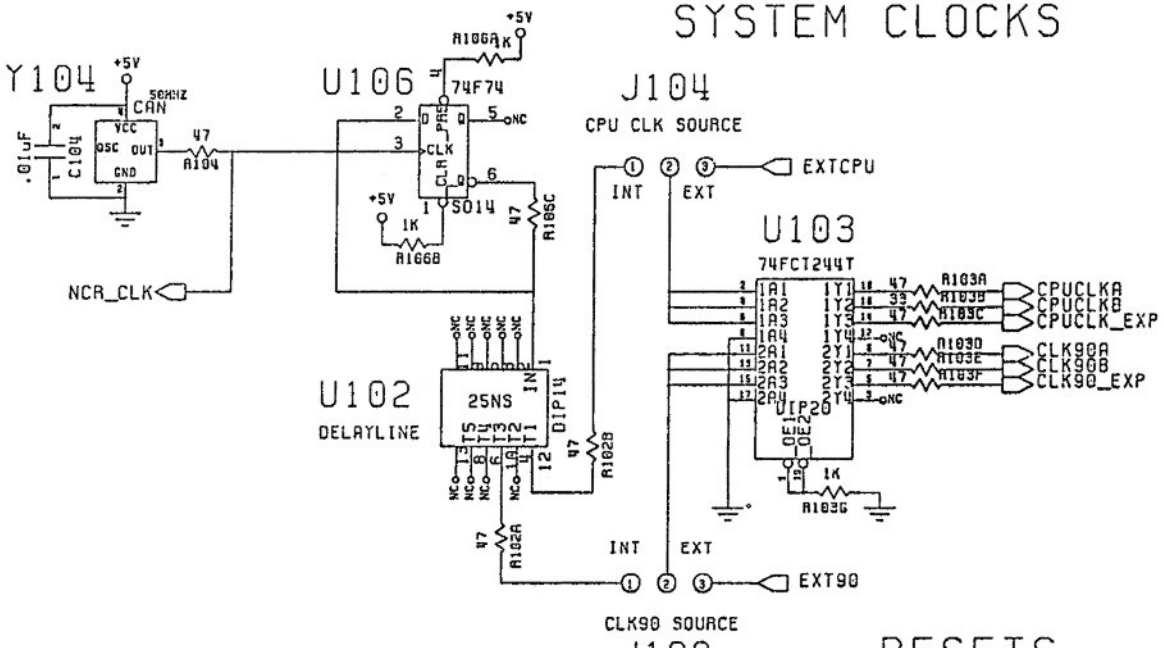

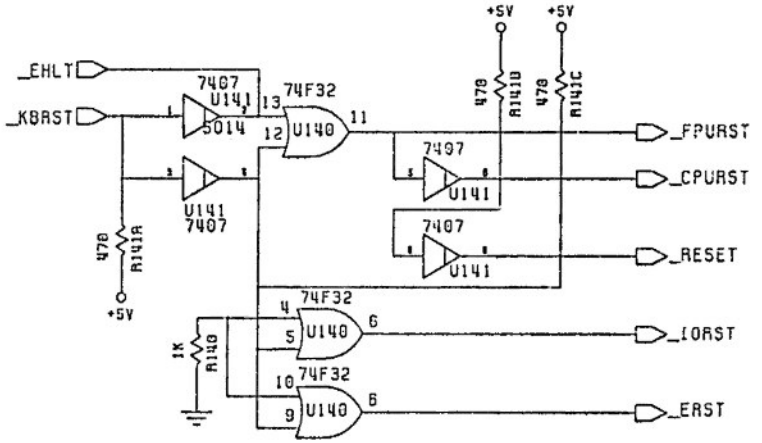

PCB MOUNTING HOLES

MT1
MT2
MT3
MT4
MT5
MT6
MT7
MT8
MT9
MT10
MT11
MT12

lend U140-sub to gary
lend U141-sub to scsi
lend U141-sub to harddisk
lend U106-sub to gary

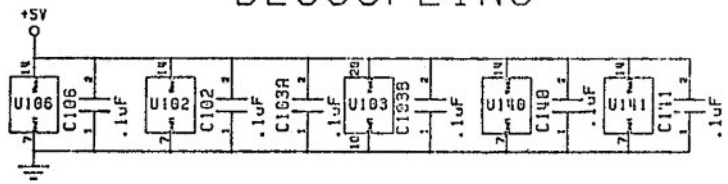

100-149

CLOCKS

© 1988 COMMODORE BUSINESS MACHINES
Information contained herein is the unpublished, confidential and trade secret property of Commodore Business Machines, Inc. Any use, reproduction or disclosure of this information without the prior written permission of Commodore is strictly prohibited.
C.A.D. Generated
No manual changes may be made to this document

Commodore
SCHEMATIC
A4000T
SIZE C | 365149 | REV 1
SCALE NONE | SHEET 3 OF 18

We hope you will enjoy the show...

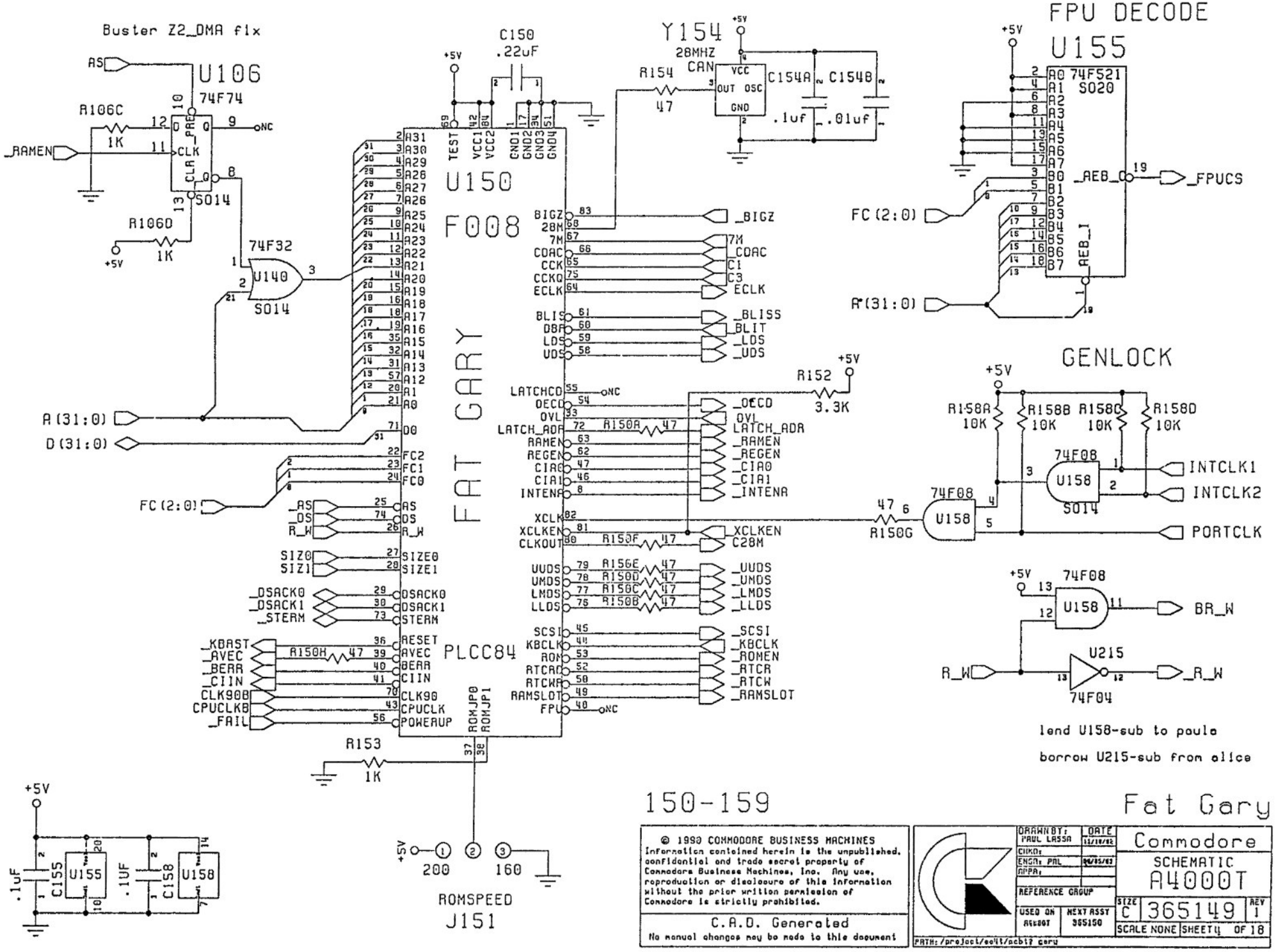

150-159

Fat Gary

© 1990 COMMODORE BUSINESS MACHINES
Information contained herein is the unpublished, confidential and trade secret property of Commodore Business Machines, Inc. Any use, reproduction or disclosure of this information without the prior written permission of Commodore is strictly prohibited.

C.A.D. Generated
No manual changes may be made to this document

DRAWN BY: PAUL LASSA	DATE 11/18/92	Commodore
CHKD:		SCHEMATIC
ENGR: PAL	06/05/93	A4000T
APPR:		
REFERENCE GROUP		SIZE C | 365149 | REV 1
USED ON A4080T	NEXT ASST 365150	SCALE NONE | SHEET 4 OF 18

PATH: /project/ec41/pcb12 gary

Just have to claw your way through this disguise...

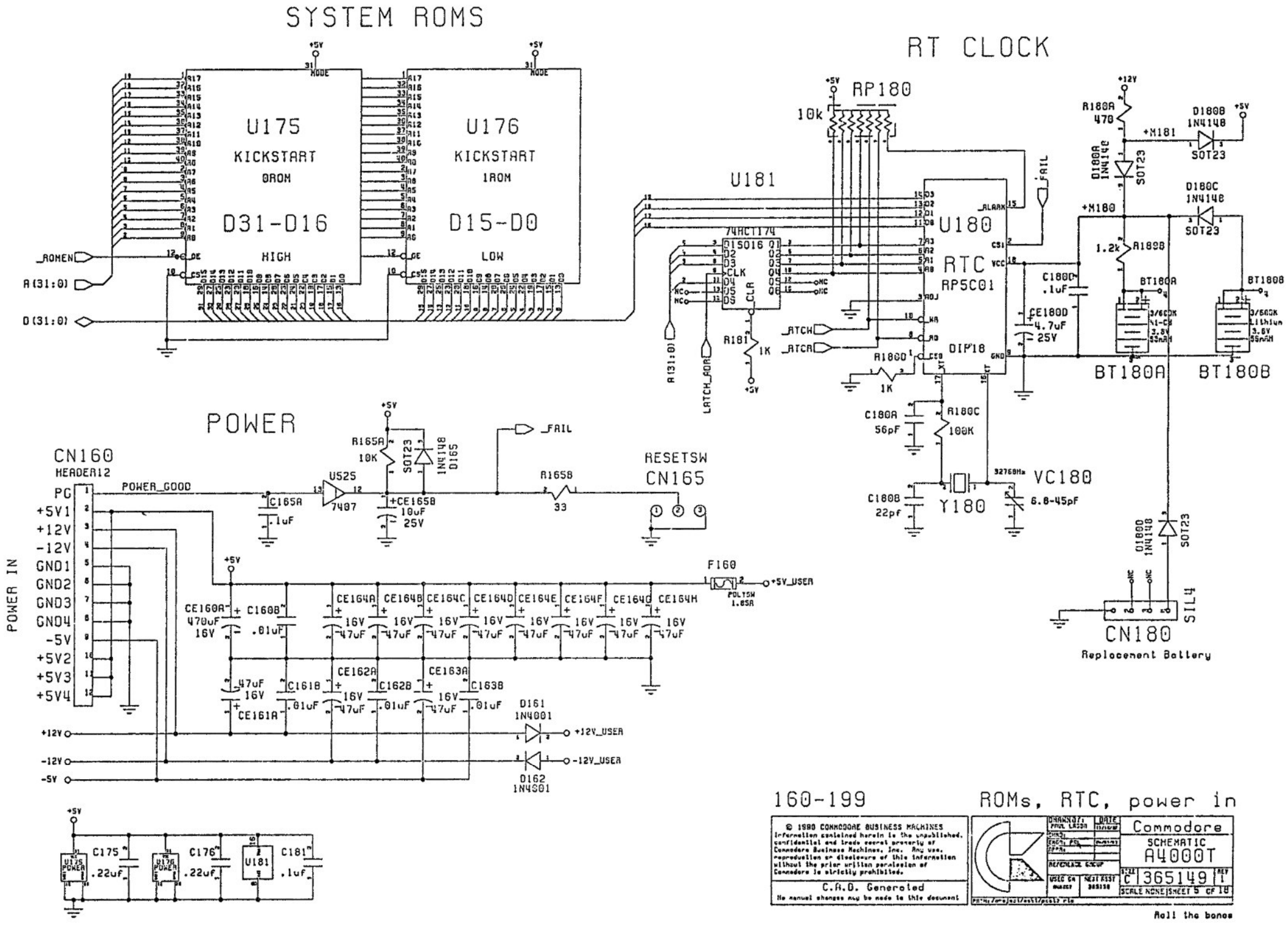
SYSTEM ROMS
U175
KICKSTART
0ROM
D31-D16
HIGH
U176
KICKSTART
1ROM
D15-D0
LOW
_ROMEN
A(31:0)
D(31:0)
RT CLOCK
RP180
10k
U181
74HCT174
U180
RTC
RP5C01
DIP18
_FAIL
_RTCW
_RTCR
R181
1K
R180D
1K
C180A
56pF
R180C
100K
C180B
22pF
Y180
VC180
6.8-45pF
C180D
.1uF
CE180D
4.7uF
25V
R180A
470
D180A
1N4148
SOT23
D180B
1N4148
SOT23
D180C
1N4148
SOT23
R180B
1.2k
BT180A
BT180B
CN180
SIL4
Replacement Battery
POWER
CN160
HEADER12
PG
+5V1
+12V
-12V
GND1
GND2
GND3
GND4
-5V
+5V2
+5V3
+5V4
POWER IN
POWER_GOOD
U525
7407
R165A
10K
SOT23
1N4148
D165
C165A
.1uF
CE165B
10uF
25V
R165B
33
RESETSW
CN165
F160
POLYSW
1.85A
+5V_USER
CE160A
470uF
16V
C160B
.01uF
CE164A
CE164B
CE164C
CE164D
CE164E
CE164F
CE164G
CE164H
16V
47uF
CE161A
47uF
16V
C161B
.01uF
CE162A
C162B
.01uF
CE163A
C163B
.01uF
D161
1N4001
D162
1N4001
+12V_USER
-12V_USER
C175
.22uF
C176
.22uF
C181
.1uF
U175 POWER
U176 POWER
U181
160-199
ROMs, RTC, power in
© 1990 COMMODORE BUSINESS MACHINES
Information contained herein is the unpublished, confidential and trade secret property of Commodore Business Machines, Inc. Any use, reproduction or disclosure of this information without the prior written permission of Commodore is strictly prohibited.
C.A.D. Generated
No manual changes may be made to this document
Commodore
SCHEMATIC
A4000T
C 365149 1
SCALE NONE SHEET 5 OF 18
Roll the bones

PART NUMBER	DESCRIPTION
365150-01	PCB Assembly, A4000T NTSC
365150-02	PCB Assembly, A4000T PAL

REVISIONS				
ZN	LTR	DESCRIPTION	DATE	APPROVED
	1	Advance Engineering Release	4/23/93	D. Burke

© 1993 COMMODORE ELECTRONICS LTD.
INFORMATION CONTAINED HEREIN IS THE UNPUBLISHED AND CONFIDENTIAL PROPERTY OF COMMODORE ELECTRONICS LTD. USE, REPRODUCTION OR DISCLOSURE OF THIS INFORMATION WITHOUT THE PRIOR WRITTEN PERMISSION OF COMMODORE IS STRICTLY PROHIBITED ALL RIGHTS RESERVED

Commodore	PCB Assembly, A4000T	Drawn by P. Lassa	Drawing # 365150
			Sheet 1 of 6

QTY. REQ. PER DASH #										ITM	PART NO.	DESCRIPTION	REF DES / NOTES
10	09	08	07	06	05	04	03	02	01	#			
								R	R	1	365149-01	SCHEMATIC	
								R	R	2	365151-01	PCB FAB	
								1	1	3	365148-01	ARTWORK	
										4			
										5		INTEGRATED CIRCUITS	
										6			
								1	1	7	391657-01	IC, 0ROM, 256Kx16, 150nS, KICKSTART (HIGH)	U175 SET J151 = PINS 2-3 (V41.XXX)
								1	1	8	391658-01	IC, 1ROM, 256Kx16, 150nS, KICKSTART (LOW)	U176 SET J151 = PINS 2-3 (V41.XXX)
										9			
								1	1	10	391227-01	IC, CSG, CSG4203, LISA (PLCC84)	U450
								1	1	11	391077-01	IC, CSG, CSG8364, PAULA (PLCC52)	U500
								1	1	12	391010-01	IC, CSG, CSG8374, ALICE (PLCC84)	U200
								2	2	13	391078-02	IC, CSG, CSG8520A, CIA (PLCC44)	U550,U560
										14			
								1	1	15	390540-02	IC, CGA, F008, FAT GARY (PLCC84)	U150
								1	1	16	390541-07	IC, CGA, F012, FAT RAMSEY (PLCC84)	U300
								1	1	17	390539-09	IC, CGA, F013, FAT BUSTER (PLCC84)	U700
								1	1	18	391380-01	IC, CGA, BRIDGETTE (PQFP100)	U250
										19			
								1	1	20	391494-01	IC, ADV7120, VIDEO DAC (PLCC44)	U460
								1	1	21	390555-01	IC, IC DELAYLINE, 5-TAP, 25NS (DIP14)	U102
								2	2	22	391597-01	IC, DS2107S, SCSI TERMINATOR (SO16)	U610,U611
								1	1	23	391421-01	IC, LM385, Voltage Ref., 1.2V (SO-8)	U470
								1	1	24	391087-01	IC, MC1488, QUAD Line Driver (SO14)	U570
								1	1	25	391086-01	IC, MC1489, QUAD Line Receiver (SO14)	U580
								1	1	26	391593-01	IC, NCR53C710, SCSI CONTROLLER (PQFP160)	U600
								1	1	27	390525-01	IC, RP5C01, RTC (DIP18)	U180
								4	4	28	391599-02	IC, DRAM512KX8, 80nS (SOJ28)	U260-U263
										29			
										30			
										31			
										32			
										33			
										34			
										35			
										36			
										37		PAL PROGRAMS	
										38			
								1	1	39	391664-01	IC, PAL, RASCAS8, P22V10-10 (PLCC28)	P212 Programmed into PN 391392-03
								1	1	40	391477-02	IC, PAL, MISC/CHIPRAM, P16L8-10 (PLCC20)	P213 Programmed into PN 391199-03
								1	1	41	391663-01	IC, PAL, HDECODE, P22V10-15 (PLCC28)	P651 Programmed into PN 391392-02
								1	1	42	3914[illegible]	IC, PAL, ISTATE, P16R6-15 (PLCC20)	P652 Programmed into PN 391403-02
								1	1	43	3914[illegible]	IC, PAL, ARBITER, P16R4-15 (PLCC20)	P701 Programmed into PN 391359-04
								1	1	44	3914[illegible]01	IC, PAL, ZORRO, P16L8-10 (PLCC20)	P702 Programmed into PN 391199-03
										45			
										46			
										47			
										48			
										49			
										50			

Commodore	Title: PCB Assembly, A4000T	Drawn by: P. Lassa	Drawing #: 365150 REV: 1
			Sheet 2 of 6

QTY. REQ. PER DASH #										ITM #	PART NO.	DESCRIPTION	REF DES / NOTES
10	09	08	07	06	05	04	03	02	01				
										51			
										52			
										53		INTEGRATED CIRCUITS, CONT'D	
										54			
								2	2	55	391188-01	7407 (SO14)	U141,U525
								1	1	56	391088-01	74F04 (SO14)	U215
								1	1	57	391183-01	74F08 (SO14)	U158
								1	1	58	391598-01	74F244 (SO20)	U602
								1	1	59	391175-01	74F32 (SO14)	U140
								1	1	60	391499-01	74F521 (SO20)	U155
								2	2	61	391320-01	74F74 (SO14)	U106,U459
								1	1	62	391481-01	74F841 (SO24)	U216
								1	1	63	391325-01	74F86 (SO14)	U711
								6	6	64	391666-01	74FCT16245 (SO48)	U370,U371,U455,U457,U560,U705
								2	2	65	391669-01	74FCT16646 (SO56)	U706,U707
								1	1	66	391400-01	74FCT244T (DIP20)	U103
								1	1	67	391311-01	74HC4066 (SO14)	U520
								2	2	68	391480-01	74HCT166 (SO16)	U541,U542
								3	3	69	391377-01	74HCT174 (SO16)	U181,U590,U670
								1	1	70	391601-01	74HCT32 (SO14)	U750
										71			
								S	S	72	391548-01	74F86, EIAJ PACKAGE (SO14)	SUB FOR ITEM 63
								S	S	73	391548-01	74HCT174, EIAJ PACKAGE (SO16)	SUB FOR ITEM 69
								S	S	74	391668-01	74ACT16245 (SO48)	SUB FOR ITEM 64
										75			
										76			
										77			
										78			
										79			
										80		MISC ELECTRICAL	
										81			
								-	1	82	325556-14	OSC, 28.63636 MHZ (CAN)	Y154 (NTSC)
								1	-	83	252344-01	OSC, 28.37516 MHZ (CAN)	Y154 (PAL)
								1	1	84	900560-03	CRYSTAL, 32768HZ	Y180
								1	1	85	325556-27	OSC, 50MHZ (CAN)	Y104
										86			
								1	1	87	391260-02	Battery, NICAD, 3.6V, 60MAH	BT130A
								S	S	88		Battery, Lithium, 3.6V, 60MAH	BT180B (SUB FOR ITEM 87)
										89			
								1	1	90	391647-01	Varistor Switch, SM, 1.85A	F160
										91			
										92			
										93			
										94			
										95			
										96			
										97			
										98			
										99			
										100			

Commodore	Title: PCB Assembly, A4000T	Drawn by: P. Lassa	Drawing #: 365150 / REV: 1
			Sheet 3 of 6

QTY. REQ. PER DASH #										ITM #	PART NO.	DESCRIPTION	REF DES / NOTES
10	09	08	07	06	05	04	03	02	01				
										101			
										102			
										103		CAPACITORS	
										104			
								13	13	105	390853-01	CAP, SM, X7R, .01UF (1206)	C104,C154B,C160B,C161B,C162B,C163B,C460D-F,C600B,C600D,C600F
										106			C600H
								4	4	107	390853-04	CAP, SM, X7R, .047UF (1206)	C500A-D
								50	50	108	310027-02	CAP, SM, Z5U, .1UF (1206)	C102,C103A,C103B,C106,C140,C141,C154A,C155,C158,C165A,C180C
										109			C181,C200A-C,C212,C213,C215,C216,C250A,C250B,C300B,C450B,C458C
										110			C460A-C,C470,C501B,C520,C525,C541,C542,C550,C556,C560,C580
										111			C590,C600A,C600C,C600E,C600G,C600I,C602,C610B,C611B,C651,C652
										112			C670,C750
								39	39	113	390797-02	CAP, SM, Z5U, .22UF (1210)	C150,C175,C176,C260A,C260B,C261A,C261B,C262A,C262B,C263A,C263B
										114			C300A,C370A,C370B,C371A,C371B,C450A,C450B,C455A,C455B,C457A
										115			C457B,C660A,C660B,C700A,C700B,C701,C702,C705A,C705B,C706A
										116			C706B,C707A,C707B,C711,C760B,C760C,C760E,C760F
								44	44	117	390853-07	CAP, SM, X7R, 1000PF (1206)	C765A-I,C766A-I,C767A-I,C775A-I,C776A-H
								2	2	118	390818-01	CAP, SM, NPO, 22PF (1206)	C180B,C459A
								15	15	119	390818-04	CAP, SM, NPO, 47PF (1206)	EC550A-F,EC551A-G,EC552,EC553
								1	1	120	390818-05	CAP, SM, NPO, 56PF (1206)	C180A
								27	27	121	390818-06	CAP, SM, NPO, 100PF (1206)	EC510A-C,EC555A-G,EC560A,EC560B,EC561,EC565A-G,EC570A-C
										122			EC580A-D
										123			
								7	7	124	391097-01	CAP, ELECT ALUM, 100UF, 6.3V (D)	CE460H,CE510,CE751-CE755
								2	2	125	391097-07	CAP, ELECT ALUM, 10UF, 25V (C)	CE165B,CE460G
								4	4	126	391097-03	CAP, ELECT ALUM, 22UF, 16V (C)	CE560A,CE560B,CE760A,CE760D
								3	3	127	391097-06	CAP, ELECT ALUM, 4.7UF, 25V (A)	CE180D,CE610A,CE611A
								2	2	128	390101-03	CAP, ELECT ALUM, 470UF, 16V (RADIAL)	CE160A,CE501A
								11	11	129	391097-04	CAP, ELECT ALUM, 47UF, 16V (D)	CE161A,CE162A,CE163A,CE164A-H
										130			
								1	1	131	251029-06	CAP, TRIMMER, CERAMIC, 6.8-45PF	VC180
										132			
										133			
										134			
										135			
										136			
										137		TRANSISTORS, DIODES, FERRITES	
										138			
								2	2	139	391121-01	NPN, SM, 2N3904 (SOT23)	Q561,Q650
										140			
								15	15	141	391327-01	DIODE, SM, 1N4001 (MELF)	D151,D162,D460A,D460D,D461A,D461B,D462A,D462B,D550A-F,D560
								6	6	142	391129-01	DIODE, SM, 1N4148 (SOT23)	D165,D180A-D,D561
										143			
								15	15	144	391092-03	FILTER, FERRITE, SM (1206)	FB555A-G,FB565A-G,FB710
								6	6	145	391559-01	FILTER, FERRITE, SM (1812)	FB500,FB510,FB550,FB556,FB560A,FB560B
										146			
								1	1	147	391138-05	INDUCTOR, SM, 47UH (1210)	L460
										148			
										149			
										150			

Commodore	Title: PCB Assembly, A4000T	Drawn by: P. Lassa	Drawing #: 365150 / REV: 1
			Sheet 4 of 6

QTY. REQ. PER DASH #										ITM	PART NO.	DESCRIPTION	REF DES / NOTES
10	09	08	07	06	05	04	03	02	01	#			
										151			
										152			
										153		RESISTORS	
										154			
								1	1	155	310026-45	RES, CHIP, 1/8W, 5%, 1 OHM (1206)	R465
								1	1	156	391093-01	RES, CHIP, 1W, 5%, 1 OHM (2512)	R501
								11	11	157	310026-54	RES, CHIP, 1/8W, 5%, 1.2K OHM (1206)	R79-R88,R180D
								1	1	158	310026-31	RES, CHIP, 1/8W, 5%, 100K OHM (1206)	R180C
								13	13	159	310026-17	RES, CHIP, 1/8W, 5%, 10K OHM (1206)	R158A-D,R165A,R520,R550C-G,R561A,R561B
								2	2	160	310026-55	RES, CHIP, 1/8W, 5%, 11K OHM (1206)	R650B,R650C
								2	2	161	310026-24	RES, CHIP, 1/8W, 5%, 120 OHM (1206)	R525A,R525B
								54	54	162	310026-07	RES, CHIP, 1/8W, 5%, 1K OHM (1206)	R67,R68,R70-R73,R103G,R106A-D,R140,R153,R180D,R181,R212A,R216A
										163			R216B,R302,R459A,R459C-E,R543,R550,R590,R600A-D,R602A-H,R652
										164			R670,R700-R712,R720-R722,R750A,R750B,R751-R754
								73	73	165	310026-16	RES, CHIP, 1/8W, 5%, 2.7K OHM (1206)	R1-R64,R74-R78,R141D,R215D,R650A,R800A
								2	2	166	310026-30	RES, CHIP, 1/8W, 5%, 220 OHM (1206)	R525C,R525D
								3	3	167	310026-46	RES, CHIP, 1/8W, 5%, 3.3K OHM (1206)	R152,R550A,R550B
								37	37	168	310026-43	RES, CHIP, 1/8W, 5%, 33 OHM (1206)	R103B,R165B,R212B-G,R213D,R216C-H,R217A-C,R300A-H,R301A-H
										169			R303-R305
								16	16	170	310026-08	RES, CHIP, 1/8W, 5%, 4.7K OHM (1206)	R141E,R454A,R541A-H,R542A-F
								22	22	171	310026-01	RES, CHIP, 1/8W, 5%, 47 OHM (1206)	R102A,R102B,R103A,R103C-F,R104,R106C,R150A-H,R154,R200A-E
										172			R213A,R215A-C,R450A-H,R451A-H,R452A-H,R453A-D,R454B-E,R455A-H
										173			R456A-H,R457A-H,R458A-H,R459B,R701-R704,R800C,R800D
										174			ER510,ER511,ER550A-F,ER551A-G,ER553,ER561,ER570A-C,ER580A-D
								1	1	175	391093-04	RES, CHIP, 1W, 5%, 47 OHM (2512)	R552
								5	5	176	310026-21	RES, CHIP, 1/8W, 5%, 470 OHM (1206)	R141A-C,R180A,R800B
								1	1	177	391154-27	RES, CHIP, 1/8W, 1%, 562 OHM (1206)	R470
								2	2	178	310026-56	RES, CHIP, 1/8W, 5%, 680 OHM (1206)	R65,R66
								3	3	179	310026-29	RES, CHIP, 1/8W, 5%, 75 OHM (1206)	R460-R462
										180			
								1	1	181	902442-35	RES NETWK, SIP, 10K (7X8)	RP180
								11	11	182	902410-10	RES NETWK, SIP, 1K (9X10)	RP455-RP457,RP751A-C,RP765-RP767,RP775,RP776
								3	3	183	360398-04	RES NETWK, SIP, 220/330 (8X10)	RP600A-C
								6	6	184	360398-06	RES NETWK, SIP, 330/470 (8X10)	RP752A-F
								1	1	185	902410-08	RES NETWK, SIP, 4.7K (9X10)	RP777
										186			
										187			
										188			
										189		SOCKETS	
										190			
								1	1	191	390768-04	SOCKET, .3, MACHINE_PIN (DIP20)	S103 (Clock distribution)
								2	2	192	904150-06	SOCKET, .6, SYSTEM ROM (DIP40)	S175,S176
								1	1	193	391321-01	SOCKETSM, BUSTER, w/ MTG. POSTS (PLCC84)	S700
								S	S	194	391321-07	SOCKETSM, BUSTER, w/o MTG. POSTS (PLCC84)	SUB FOR ITEM 193
								8	8	195	390768-04	SOCKET, SINGLE_PIN (.040HOLE)	S104A-D,S154A-D
								4	4	196	391665-01	SOCKET, X32SIMM (SIMM72)	S351-S354
										197			
										198			
										199			
										200			

Commodore	Title: PCB Assembly, A4000T	Drawn by: P. Lassa	Drawing #: 365150	REV: 1
			Sheet 5	of 6

QTY. REQ. PER DASH #										ITM #	PART NO.	DESCRIPTION	REF DES / NOTES
10	09	08	07	06	05	04	03	02	01				
										201			
										202			
										203		CONNECTORS	
										204			
								5	5	205	903446-06	CONN100 (ZORRO)	CN751-CN755
								1	1	206	390557-01	CONN200 (KEL)	CN800
								8	8	207	903446-04	CONN36 (CARD)	CN451,CN452,CN771-CN774
								2	2	208	903446-08	CONN54 (CARD)	CN453,CN454
								4	4	209	903446-02	CONN62 (CARD)	CN761-CN764
								4	4	210	903345-20	DIL40, Aud/Vid_M,Ports_M, IDE (.1X.1)	CN450,CN550,CN560,CN650
								1	1	211	903345-29	DIL56, Disk_M (.1X.1)	CN600
								1	1	212	390995-01	DIN5 (KEYBD)	CN510
								1	1	213	391269-01	HEADER12, POWER IN (X.156)	CN160
										214			
								4	4	215	903326-03	SIL3 (X.1)	CN165,CN521-CN523
								2	2	216	903326-04	SIL4 (X.1)	CN180,CN500
								1	1	217	903326-05	SIL5 (X.1)	CN520
										218			
										219		HARNESS HEADERS (DESCRIPTION)	HARNESS WIRE COLOR
										220			
										221		CN165 (RESET SWITCH) SIL3	WHITE,WHITE
										222		CN180 (Replacement Battery) SIL4	
										223		CN500 (SPEAKER OUT) SIL4	BLACK,(),(),YELLOW
										224		CN520 (KEYLOCK/PowerLED) SIL5	BROWN,(),BLACK,RED,BLACK
										225		CN521 (SPEAKER SWITCH) SIL3	YELLOW,BLUE
										226		CN522 (SPEAKER LED) SIL3	WHITE,YELLOW
										227		CN523 (SCSI/IDE LED) SIL3	WHITE,RED
										228			
										229		CONFIGURATION JUMPERS	
										230			
								1	1	231	903345-05	DIL12 (.1X.1)	J540
								6	6	232	903326-03	SIL3 (X.1)	J100,J104,J151,J212,J300,J500
										233			
								6	6	234	390043-01	SHORTING BARS (SHUNTS)	J100,J104,J151,J212,J300,J500
										235			
										236			
										237		JUMPER SETTINGS	JUMPER DESCRIPTION
										238			
										239		J100 (CLK90 clock source) determined by assy.	pins 1-2 = Internal, pins 2-3 = External
										240		J104 (CPUCLK clock source) determined by assy.	pins 1-2 = Internal, pins 2-3 = External
										241			
										242		J151 (ROM Speed)	pins 1-2 = 200ns, pins 2-3 = 100ns
										243		J212 (NTSC/PAL) pins 1-2 = -01, pins 2-3 = -02	pins 1-2 = NTSC, pins 2-3 = PAL
										244		J300 (RAM Size) determined by assy.	pins 1-2 = 1M x 32, pins 2-3 = 256K x 32
										245		J500 (SYNC ON GREEN) pins 1-2	pins 1-2 = no, pins 2-3 = yes
										246			
										247			
										248		UNSTUFFED COMPONENTS	
										249			
										250			

Commodore	Title: PCB Assembly, A4000T	Drawn by: P. Lassa	Drawing #: 365150
			REV: 1
			Sheet 6 of 6

DISK MODULE

REVISIONS			
ZONE	LTR	DESCRIPTION	DATE APPROVED
	1	ADVANCE ENGINEERING RELEASE	4-23-93

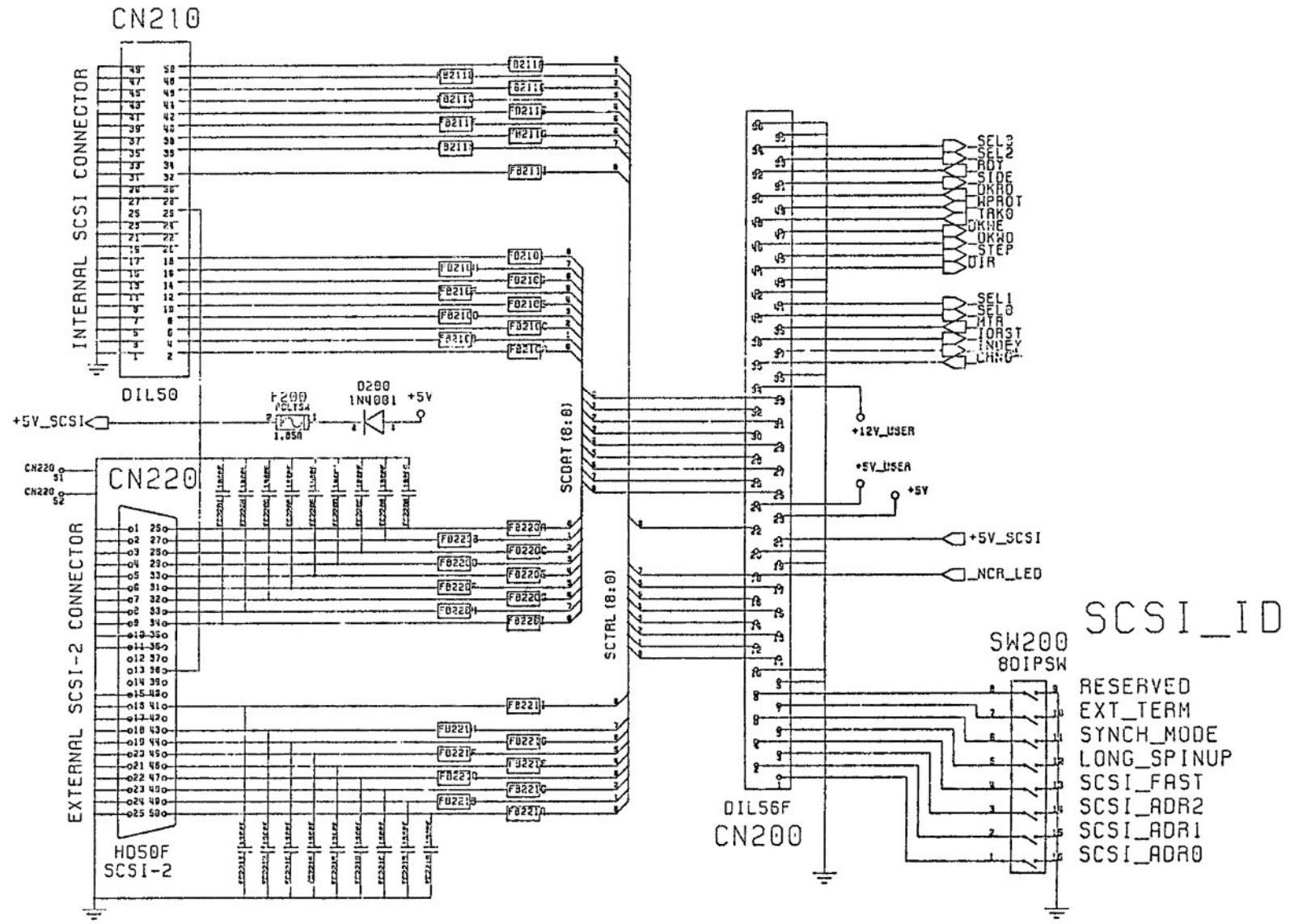

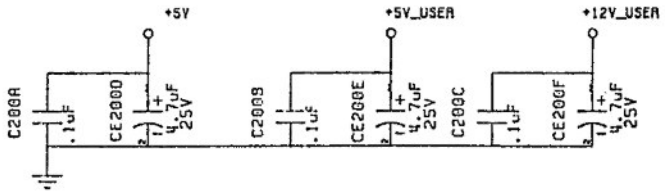

200-249

SCSIports

© 1990 COMMODORE BUSINESS MACHINES
Information contained herein is the unpublished, confidential and trade secret property of Commodore Business Machines, Inc. Any use, reproduction or disclosure of this information without the prior written permission of Commodore is strictly prohibited.
C.A.D. Generated
No manual changes may be made to this document

Commodore
SCHEMATIC
DISK_MOD
SIZE C 365255 REV 1
SCALE NONE SHEET 1 OF 3

DISK MODULE

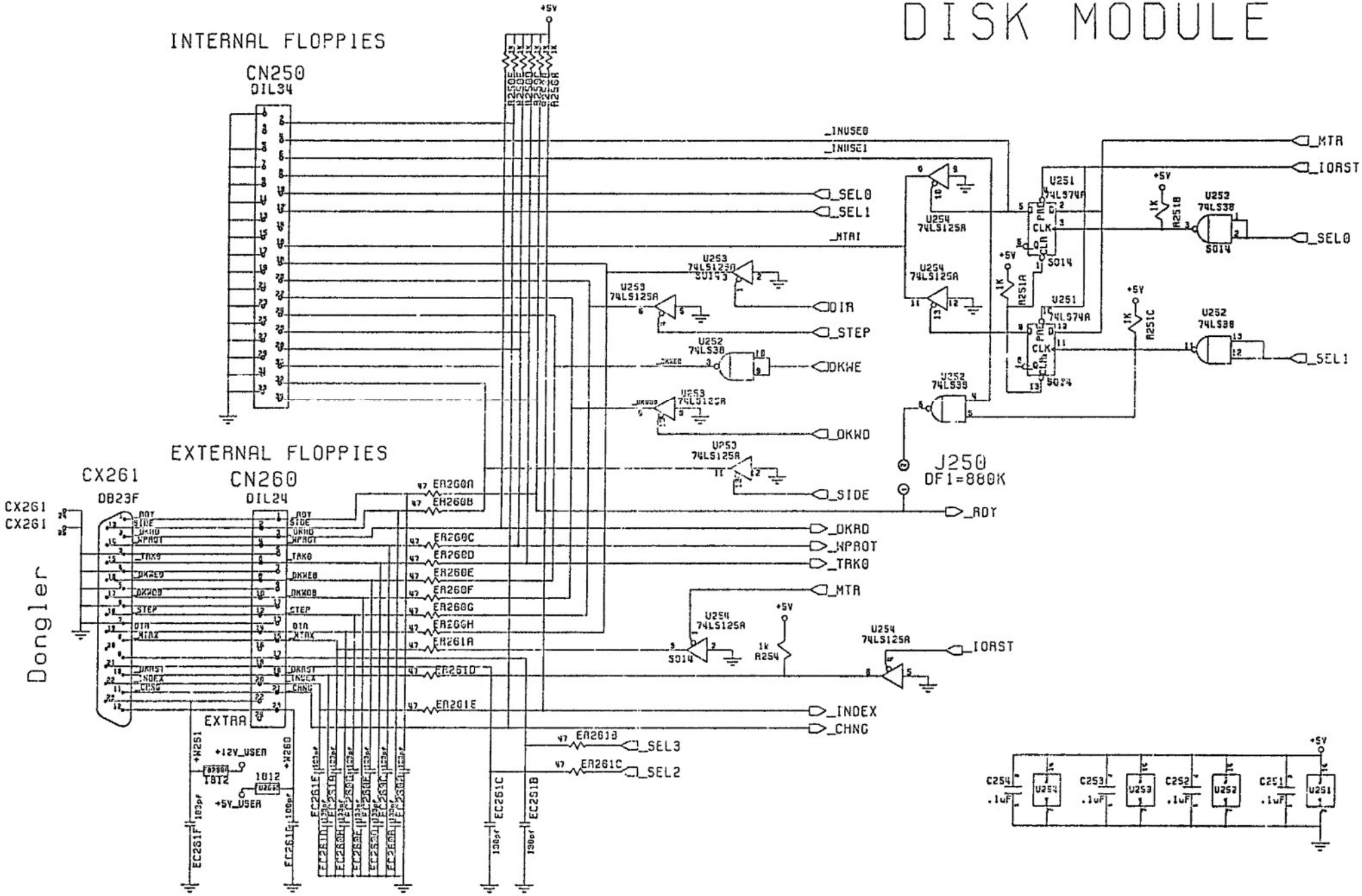

250-289

Floppy

© 1990 COMMODORE BUSINESS MACHINES
Information contained herein is the unpublished, confidential and trade secret property of Commodore Business Machines, Inc. Any use, reproduction or disclosure of this information without the prior written permission of Commodore is strictly prohibited.

C.A.D. Generated

Do manual changes may be made to this document

Commodore

SCHEMATIC

DISK_MOD

365255

DISK MODULE

'Flidget'

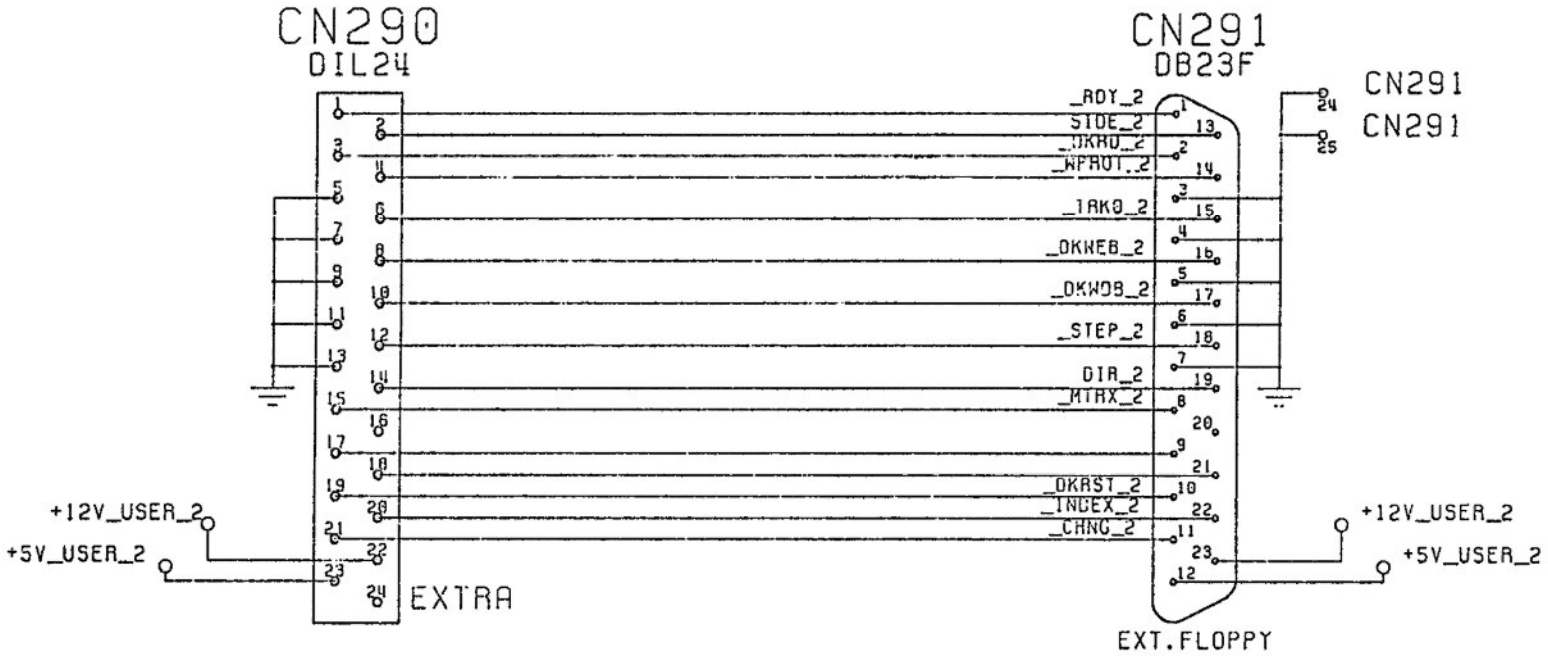

290-299 EXTfloppy widget

© 1990 COMMODORE BUSINESS MACHINES
Information contained herein is the unpublished, confidential and trade secret property of Commodore Business Machines, Inc. Any use, reproduction or disclosure of this information without the prior written permission of Commodore is strictly prohibited.

C.A.D. Generated
No manual changes may be made to this document

DRAWN BY: PAUL LASSA	DATE 6/25/92	Commodore
CHKD:		SCHEMATIC
ENGR: PAL	6/25/92	DISK_MOD
APPR:		
REFERENCE GROUP		SIZE C | 365255 | REV 1
USED ON A4000T	NEXT ASST 365257	SCALE NONE | SHEET 3 OF 3

PATH: /project/ae41/disk_mod flidget

PART NUMBER	DESCRIPTION
365257-01	PCB Assembly, A4000T DISK Module

REVISIONS				
ZN	LTR	DESCRIPTION	DATE	APPROVED
	1	Advance Engineering Release	4/23/93	P. Lassa

© 1993 COMMODORE ELECTRONICS LTD.
INFORMATION CONTAINED HEREIN IS THE UNPUBLISHED AND CONFIDENTIAL PROPERTY OF COMMODORE ELECTRONICS LTD. USE, REPRODUCTION OR DISCLOSURE OF THIS INFORMATION WITHOUT THE PRIOR WRITTEN PERMISSION OF COMMODORE IS STRICTLY PROHIBITED ALL RIGHTS RESERVED

Commodore	PCB Assembly, A4000T DISK Module	Drawn by P. Lassa	Drawing # 365257
			Sheet 1 of 2

QTY. REQ. PER DASH #										ITM	PART NO.	DESCRIPTION	REF DES / NOTES
10	09	08	07	06	05	04	03	02	01	#			
									R	1	365255-01	SCHEMATIC	
									R	2	365258-01	PCB FAB	
									1	3	365256-01	ARTWORK	
										4			
										5		INTEGRATED CIRCUITS	
									2	6	391191-01	74LS125A (SO14)	U253,U254
									1	7	391326-01	74LS38 (SO14)	U252
									1	8	391141-01	74LS74A (SO14)	U251
										9			
										10		CAPACITORS	
									7	11	310027-02	CAP, SM, Z5U, .1UF (1206)	C200A-C,C251-C254
									33	12	390818-06	CAP, SM, NPO, 100PF (1206)	EC220A-I,EC221A-I,EC260A-H,EC261A-G
										13			
									3	14	391097-06	CAP, ELECT ALUM, 4.7UF, 25V (A)	CE200D-F
										15			
										16		RESISTORS	
									1	17	310026-07	RES, CHIP, 1/8W, 5%, 1K OHM (1206)	R250A-F,R251A-C,R254
									1	18	310026-01	RES, CHIP, 1/8W, 5%, 47 OHM (1206)	ER260A-H,ER261A-E
										19			
										20		MISC.	
									1	21	391647-01	Varistor Switch, SM, 1.65A	F200
									1	22	391327-01	DIODE, SM, 1N4001 (MELF)	D200
									36	23	391092-03	FILTER, FERRITE, SM (1206)	FB210A-I,FB211A-I,FB220A-I,FB221A-I
									2	24	391559-01	FILTER, FERRITE, SM (1812)	FB260A,FB260B
										25			
										26		SWITCHES	
									1	27	390362-02	8DIPSW (RA)	SW200
										28			
										29		CONNECTORS	
										30			
										31			
									1	32	903345-17	DIL34, INT. FLOPPY (.1X.1)	CN250
									1	33	903345-25	DIL50, INT. SCSI-2 (.1X.1)	CN210
									1	34	380311-05	DIL50F (.1X.1)	CN200
									1	35	391591-01	HD50F (SCSI-2)	CN220
										36			
										37		UNSTUFFED CONNECTORS	
										38		D-SUB, 23 PIN, Female, EXT.FLOPPY (RA)	CX261, CN260, CN290, CN291
										39			
										40		CONFIGURATION JUMPERS	
									1	41	903326-02	SIL2 (X.1) DEFAULT NO SHUNT	J250 (DF1: = 880K)
										42			
										43			
										44			
										45			
										46			
										47			
										48			
										49			
										50			

Commodore	Title: PCB Assembly, A4000T DISK Module	Drawn by: P. Lassa	Drawing #: 365257 REV: 1
			Sheet 2 of 2

AUD_VID MODULE

REVISIONS				
ZONE	LTR	DESCRIPTION	DATE	APPROVED
	1	ADVANCE ENGINEERING RELEASE	4-23-93	LicB

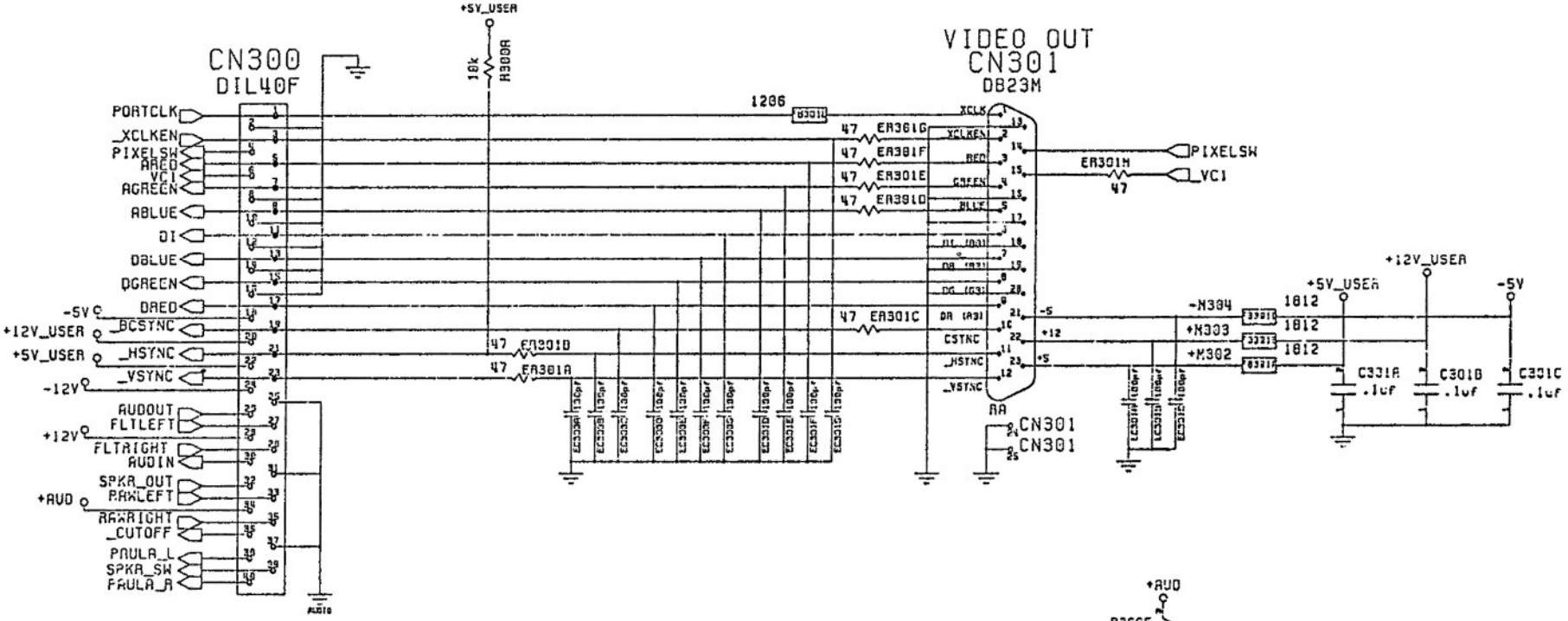

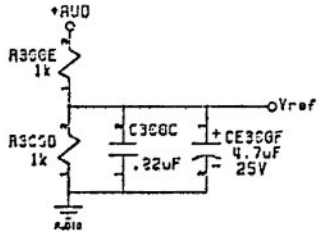

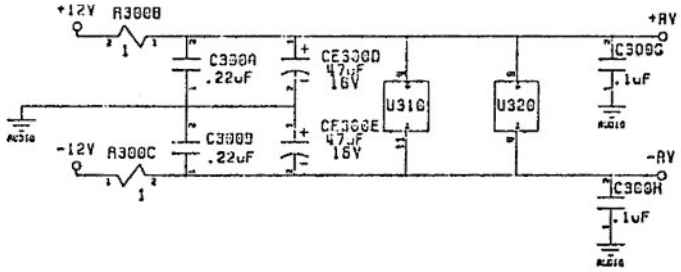

300-301 RGB Video

©1992 COMMODORE-AMIGA, INC.
Information contained herein is the unpublished, confidential and trade secret property of Commodore-Amiga, Inc. Any use, reproduction, or disclosure of this information without the prior written permission of Commodore is strictly prohibited.

C.A.D. Generated
No manual changes may be made to this document

Commodore
SCHEMATIC
AUD_VID
SIZE C 365259 REV 7
SCALE NONE SHEET 1 OF 2

AUD_VID MODULE

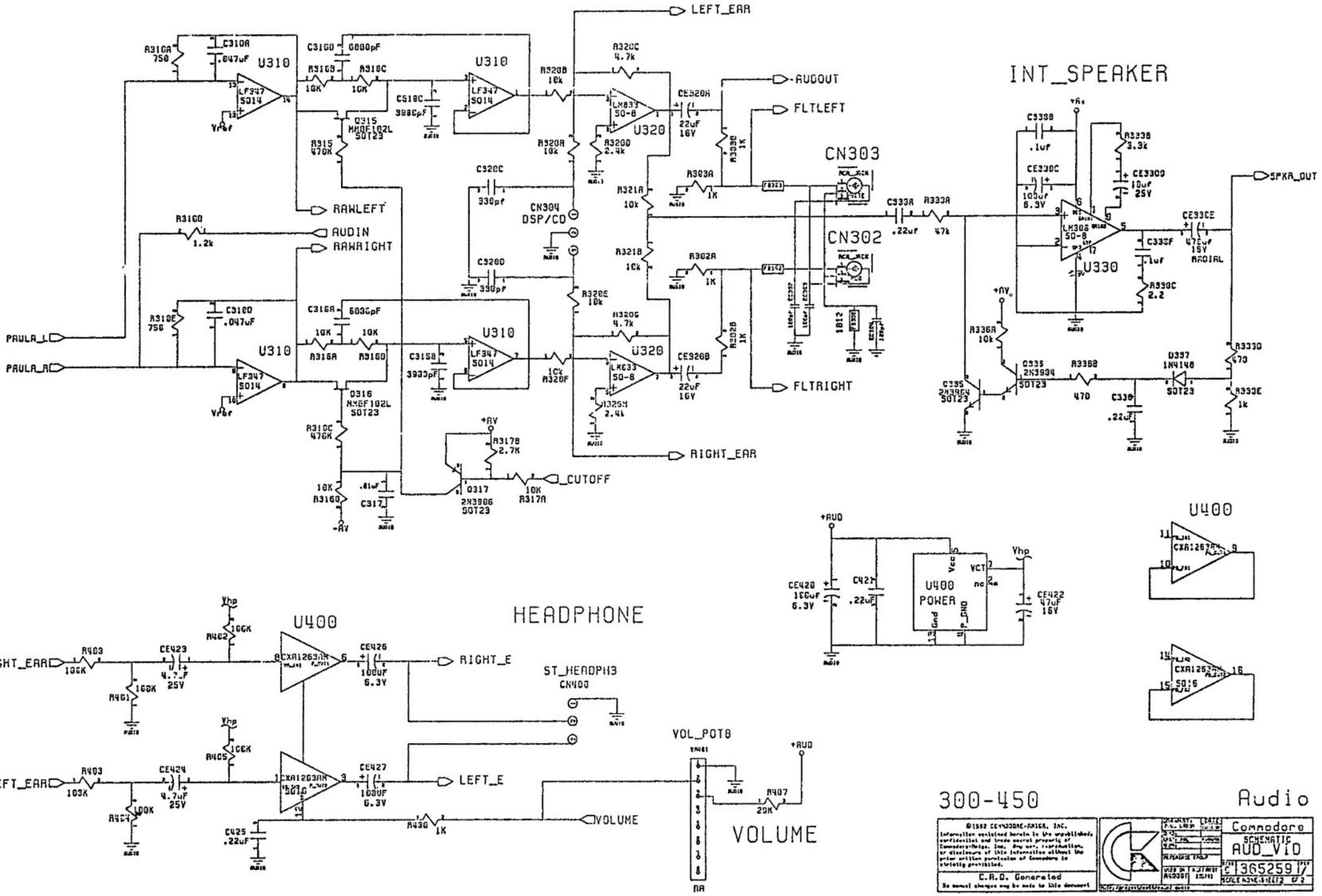

300-450

Audio

©1992 COMMODORE-AMIGA, INC.
Information contained herein is the unpublished confidential and trade secret property of Commodore-Amiga, Inc. Any use, reproduction, or disclosure of this information without the prior written permission of Commodore is strictly prohibited.

C.A.D. Generated

No manual changes may be made to this document

Commodore

SCHEMATIC AUD_VID

C 365259 1

PART NUMBER	DESCRIPTION
365261-01	PCB Assembly, A4000T AUDIO/VIDEO Module

REVISIONS				
ZN	LTR	DESCRIPTION	DATE	APPROVED
	1	Advance Engineering Release	4/23/93	A. Bu...

© 1993 COMMODORE ELECTRONICS LTD.
INFORMATION CONTAINED HEREIN IS THE UNPUBLISHED AND CONFIDENTIAL PROPERTY OF COMMODORE ELECTRONICS LTD. USE, REPRODUCTION OR DISCLOSURE OF THIS INFORMATION WITHOUT THE PRIOR WRITTEN PERMISSION OF COMMODORE IS STRICTLY PROHIBITED ALL RIGHTS RESERVED

Commodore	PCB Assembly, A4000T AUD/VID Module	Drawn by P. Lassa	Drawing # 365261
			Sheet 1 of 3

QTY. REQ. PER DASH #										ITM	PART NO.	DESCRIPTION	REF DES / NOTES
10	09	08	07	06	05	04	03	02	01	#			
									R	1	365259-01	SCHEMATIC	
									R	2	365262-01	PCB FAB	
									1	3	365260-01	ARTWORK	
										4			
										5		INTEGRATED CIRCUITS	
									1	6	391630-01	CXA1263AM, Audio HEADPH Amp (SO16)	U400
									1	7	391103-01	LF347, Op Amp, Quad JFET (SO14)	U310
									1	8	391671-01	LM386, Audio Speaker Amp (SO-8)	U330
									1	9	391473-01	LM833, Op Amp, Dual (SO-8)	U320
										10			
										11		CAPACITORS	
									1	12	390853-01	CAP, SM, X7R, .01UF (1206)	C317
									2	13	390853-04	CAP, SM, X7R, .047UF (1206)	C310A,C310D
									7	14	310027-02	CAP, SM, Z5U, .1UF (1206)	C300G,C300H,C301A-C,C330B,C330F
									7	15	390797-02	CAP, SM, Z5U,.22UF (1210)	C300A-C,C330A,C336,C421,C425
									2	16	390818-10	CAP, SM, NPO, 330PF (1206)	C320C,C320D
									2	17	390853-08	CAP, SM, X7R, 3900PF (1206)	C310C,C316B
									2	18	390853-09	CAP, SM, X7R, 6800PF (1206)	C310B,C316A
										19			
									17	20	390818-06	CAP, SM, NPO, 100PF (1206)	EC300A-G,EC301A-G,EC302-EC304
										21			
									4	22	391097-01	CAP, ELECT ALUM, 100UF, 6.3V (D)	CE330C,CE420,CE426,CE427
									1	23	391097-07	CAP, ELECT ALUM, 10UF, 25V (C)	CE330D
									2	24	391097-03	CAP, ELECT ALUM, 22UF, 16V (C)	CE320A,CE320B
									3	25	391097-05	CAP, ELECT ALUM, 4.7UF, 25V (A)	CE300F,CE423,CE424
									1	26	390101-03	CAP, ELECT ALUM, 470UF, 16V (RADIAL)	CE330E
									3	27	391097-04	CAP, ELECT ALUM, 47UF, 16V (D)	CE300D,CE300E,CE422
										28			
										29		TRANSISTORS, DIODES, FERRITES	
									2	30	391121-01	NPN, SM, 2N3904 (SOT23)	Q335,Q336
									1	31	391122-01	PNP, SM, 2N3906 (SOT23)	Q317
									2	32	391145-01	JFET, MMBF102L (SOT23)	Q315,Q316
										33			
									1	34	391129-01	DIODE, SM, 1N4148 (SOT23)	D337
										35			
									3	36	391092-03	FILTER, FERRITE, SM (1206)	FB301D,FB302,FB303
									4	37	391559-01	FILTER, FERRITE, SM (1812)	FB300,FB301A-C
										38			
										39			
										40			
										41			
										42			
										43			
										44			
										45			
										46			
										47			
										48			
										49			
										50			

Commodore	Title: PCB Assembly, A4000T AUD/VID Module	Drawn by: P. Lassa	Drawing #: 365261 REV: 1
			Sheet 2 of 3

QTY. REQ. PER DASH#										ITM	PART NO.	DESCRIPTION	REF DES / NOTES
10	09	08	07	06	05	04	03	02	01	#			
										51		RESISTORS	
									2	52	310026-45	RES, CHIP, 1/8W, 5%, 1 OHM (1206)	R300B,R300C
									1	53	310026-54	RES, CHIP, 1/8W, 5%, 1.2K OHM (1206)	R310D
									4	54	310026-31	RES, CHIP, 1/8W, 5%, 100K OHM (1206)	R401,R402,R404,R405
									14	55	310026-17	RES, CHIP, 1/8W, 5%, 10K OHM (1206)	R300A,R310B,R310C,R316A,R316B,R316D,R317A
										56			R320A,R320B,R320E,R320F,R321A,R321B,R336A
									8	57	310026-07	RES, CHIP, 1/8W, 5%, 1K OHM (1206)	R300D,R300E,R302A,R302B,R303A,R303B,R330E,R406
										58			
									1	59	310026-60	RES, CHIP, 1/8W, 5%, 2.2 OHM (1206)	R330C
									2	60	310026-51	RES, CHIP, 1/8W, 5%, 2.4K OHM (1206)	R320D,R320H
									1	61	310026-16	RES, CHIP, 1/8W, 5%, 2.7K OHM (1206)	R317B
									1	62	310026-48	RES, CHIP, 1/8W, 5%, 20K OHM (1206)	R407
									1	63	310026-46	RES, CHIP, 1/8W, 5%, 3.3K OHM (1206)	R330B
									2	64	310026-08	RES, CHIP, 1/8W, 5%, 4.7K OHM (1206)	R320C,R320G
									2	65	310026-21	RES, CHIP, 1/8W, 5%, 470 OHM (1206)	R330D,R336B
									2	66	310026-19	RES, CHIP, 1/8W, 5%, 470K OHM (1206)	R315,R316C
									1	67	310026-03	RES, CHIP, 1/8W, 5%, 47K OHM (1206)	R330A
									2	68	310026-57	RES, CHIP, 1/8W, 5%, 750 OHM (1206)	R310A,R310E
									2	69	310026-31	RES, CHIP, 1/8W, 5%, 100K OHM (1206)	R400,R403
										70			
									8	71	310026-01	RES, CHIP, 1/8W, 5%, 47 OHM (1206)	ER301A-H
										72			
										73			
										74			
										75		CONNECTORS	
									1	76	390242-03	D-SUB, 23 PIN, Male, RGB VIDEO (RA)	CN301
									1	77	380311-06	DIL40F (.1X.1)	CN300
									1	78	391690-01	HEADPH3 (STEREO)	CN400
									1	79	252122-02	RCA_JACK (RED)	CN302
									1	80	252122-01	RCA_JACK (WHITE)	CN303
									1	81	903326-03	SIL3 (X.1)	CN304
										82			
										83			
										84		NOT STUFFED	VR1
										85			
										86			
										87			
										88			
										89			
										90			
										91			
										92			
										93			
										94			
										95			
										96			
										97			
										98			
										99			
										100			

Commodore	Title: PCB Assembly, A4000T AUD/VID Module	Drawn by: P. Lassa	Drawing #: 365261
			REV: 1
			Sheet 3 of 3

*** THIS DRAWING IS FOR REFERENCE ONLY ***

	ESCRIP		APPRO
1	ADVANCE ENGINEERING RELEASE	V-2393	D.B. Li

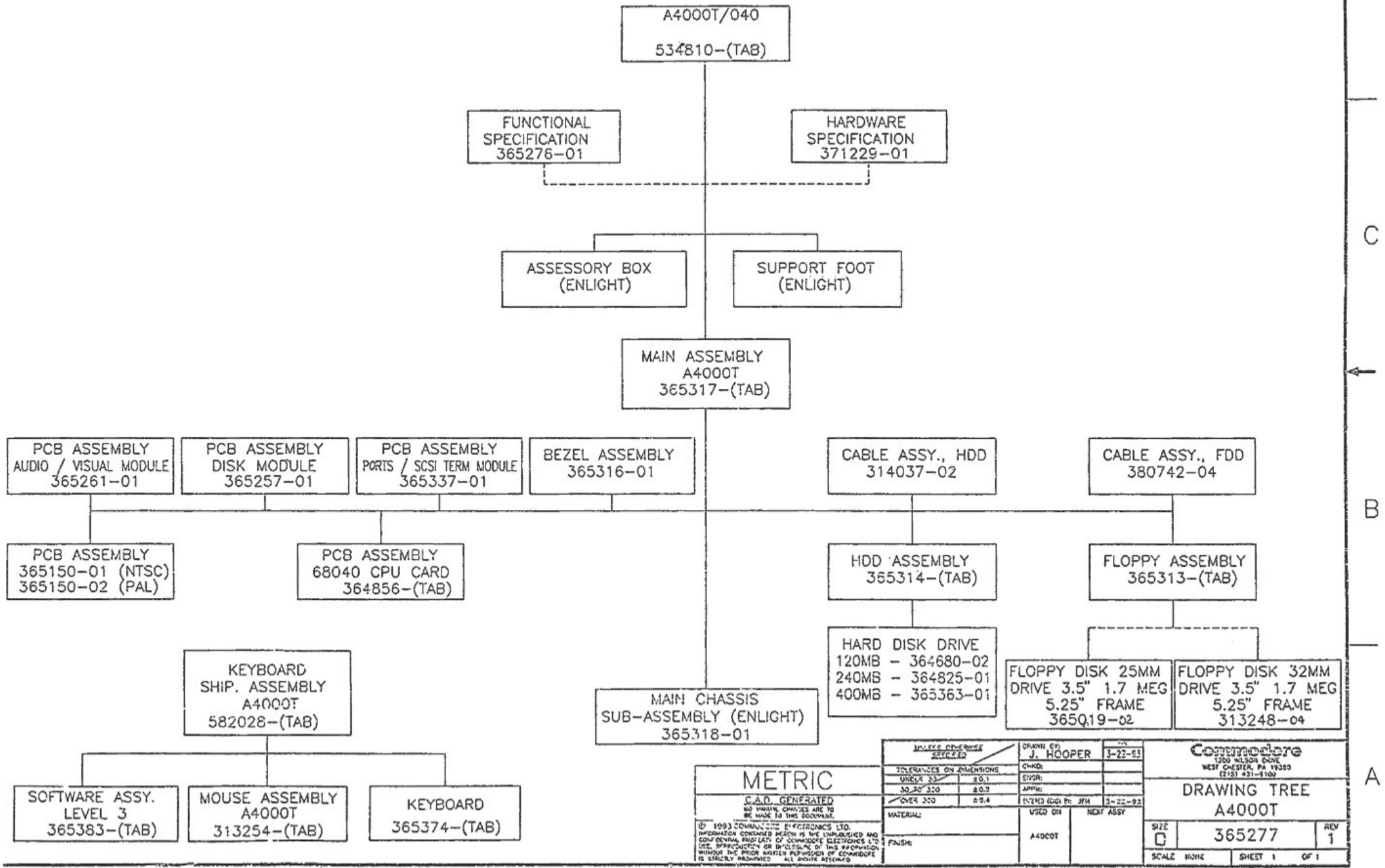

METRIC

C.A.D. GENERATED

NO MANUAL CHANGES ARE TO BE MADE TO THIS DOCUMENT.

© 1993 COMMODORE ELECTRONICS LTD. INFORMATION CONTAINED HEREIN IS THE UNPUBLISHED AND CONFIDENTIAL PROPERTY OF COMMODORE ELECTRONICS LTD. USE, REPRODUCTION OR DISCLOSURE OF THIS INFORMATION WITHOUT THE PRIOR WRITTEN PERMISSION OF COMMODORE IS STRICTLY PROHIBITED. ALL RIGHTS RESERVED

UNLESS OTHERWISE SPECIFIED

TOLERANCES ON DIMENSIONS: UNDER 33 ±0.1; 33 TO 330 ±0.3; OVER 330 ±0.4

DRAWN BY: J. HOOPER 3-22-93

CHKD:

ENGR:

APPR:

INTEND LOAD BY: JFH 3-22-93

MATERIAL:

FINISH:

USED ON: A4000T

NEXT ASSY

Commodore
1200 WILSON DRIVE
WEST CHESTER, PA 19380
(215) 431-9100

DRAWING TREE
A4000T

SIZE C | 365277 | REV 1

SCALE NONE | SHEET 1 OF 1

4 3 2 1

D C B A

PART NUMBER	DESCRIPTION
365314-01	HDD ASSEMBLY, A1000T, 120MB
365314-02	HDD ASSEMBLY, A1000T, 240MB
365314-03	HDD ASSEMBLY, A4000T, 535MB

REVISIONS				
ZN	LTR	DESCRIPTION	DATE	APPROVED
	1	ADVANCE ENGINEERING RELEASE	4-23-93	

1. SHEET 3 OF 3 SIZE C
ASSY. DWG 365314

c 1993 Commodre Electronics LTD.
INFORMATION CONTAINED HEREIN IS THE UNPUBLISHED AND CONFIDENTIAL PROPERTY OF COMMODORE ELECTRONICS LTD. USE, REPRODUCTION OR DISCLOSURE OF THIS INFORMATION WITHOUT THE PRIOR WRITTEN PERMISSION OF COMMODORE IS STRICTLY PROHIBITED. ALL RIGHTS RESERVED

Commodore	TITLE HDD ASSEMBLY,A4000T	Drawn by J. Hooper	Drawing # 365314
			Sheet 1 of 3

QUANTITY REQUIRED PER DASH #																						ITM	PART NO.	DESCRIPTION	REF DES / NOTES
25	24	23	22	21	20	19	18	17	16	15	14	13	12	11	10	09	08	07	06	05	04	03	02	01	#			
																						-	-	1	1	364600-02	HARD DISK DRIVE, 170 MB, SCSI	
																						-	1	-	2	364825-01	HARD DISK DRIVE, 240 MB, SCSI	
																						1	-	-	3	365363-01	HARD DISK DRIVE, 535 MB, SCSI	
																									4			
																						2	2	2	5	365360-01	SLIDE,GUIDE ASSEMBLY	EN-5203502
																						4	4	4	6	900610-03	SCREW 6-32 X 3/8 LG.	
																									7			
																						-	S	-	8	364825-02	HARD DISK DRIVE, 240 MB, SCSI	SUB FOR ITEM 2
																									9			
																						2	2	2	10	365364-01	HDD 3.5" TO 5.25" ADAPTER BRACKET	
																									11			
																									12			
																									13			
																									14			
																									15			
																									16			
																									17			
																									18			
																									19			
																									20			
																									21			
																									22			
																									23			
																									24			
																									25			
																									26			
																									27			
																									28			
																									29			
																									30			
																									31			
																									32			
																									33			
																									34			
																									35			
																									36			
																									37			
																									38			
																									39			
																									40			
																									41			
																									42			
																									43			
																									44			
																									45			
																									46			
																									47			
																									48			
																									49			
																									50			

Commodore	Title HDD ASSEMBLY,A4000T	Drawn by J. HOOPER	Drawing # 366314 REV 1
			Sheet 2 of 3

PART NUMBER	DESCRIPTION
365316-01	BEZEL ASSEMBLY,A4000T

REVISIONS				
ZN	LTR	DESCRIPTION	DATE	APPROVED
	1	ADVANCE ENGINEERING RELEASE	7-23-93	A. Buck

1. SHEET 3 OF 3 SIZE C
ASSY. DWG 365316

c 1993 Commodre Electronics LTD.
INFORMATION CONTAINED HEREIN IS THE UNPUBLISHED AND CONFIDENTIAL PROPERTY OF COMMODORE ELECTRONICS LTD. USE, REPRODUCTION OR DISCLOSURE OF THIS INFORMATION WITHOUT THE PRIOR WRITTEN PERMISSION OF COMMODORE IS STRICTLY PROHIBITED. ALL RIGHTS RESERVED

Commodore	TITLE BEZEL ASSEMBLY,A4000T	Drawn by J. Hooper	Drawing # 365316
			Sheet 1 of 3

QUANTITY REQUIRED PER DASH #																							ITM	PART NO.	DESCRIPTION	REF DES / NOTES
25	24	23	22	21	20	19	18	17	16	15	14	13	12	11	10	09	08	07	06	05	04	03	02	01	#			
																								1	1	365312-01	FRONT BEZEL A4000T	
																									2			
																								1	3	365309-01	DOOR WINDOW	
																									4			
																								1	5	365310-01	BEZEL DOOR	
																									6			
																								1	7	365311-01	NAMEPLATE	
																									8			
																								1	9	365384-01	PUSH DOOR LOCK MECHANISM	EN-
																									10			
																								4	11	365358-01	SNAP-IN COVER PLATE FDD	EN-3105228
																									12			
																								3	13	365357-01	PUSH CONTROL BUTTON	EN-3501477
																									14			
																								3	15	365282-01	RETAINER SPRING	EN-3501477
																									16			
																								3	17	365356-01	LED LENS	EN-3103280
																									18			
																								6	19	365359-01	RETAINER SPRING	EN-3035045373
																									20			
																								6	21	251449-01	SCREW SELF-TAPPING M4 X 6	EN-3650060625
																									22			
																									23			
																									24			
																									25			
																									26			
																									27			
																									28			
																									29			
																									30			
																									31			
																									32			
																									33			
																									34			
																									35			
																									36			
																									37			
																									38			
																									39			
																									40			
																									41			
																									42			
																									43			
																									44			
																									45			
																									46			
																									47			
																									48			
																									49			
																									50			

Commodore	Title: BEZEL ASSEMBLY,A4000T	Drawn by: J. HOOPER	Drawing # 365316 / REV 1
			Sheet 2 of 3

PART NUMBER	DESCRIPTION
365317-01	MAIN ASSEMBLY A4000T 3F1.44M 3H120MB 2M+4M NTSC
365317-02	MAIN ASSEMBLY A4000T 3F1.44M 3H120MB 2M+4M PAL
365317-03	MAIN ASSEMBLY A4000T 3F1.44M 3H120MB 2M+8M NTSC
365317-04	MAIN ASSEMBLY A4000T 3F1.44M 3H120MB 2M+8M PAL
365317-05	MAIN ASSEMBLY A4000T 3F1.44M 3H240MB 2M+4M NTSC
365317-06	MAIN ASSEMBLY A4000T 3F1.44M 3H240MB 2M+4M PAL
365317-07	MAIN ASSEMBLY A4000T 3F1.44M 3H240MB 2M+8M NTSC
365317-08	MAIN ASSEMBLY A4000T 3F1.44M 3H240MB 2M+8M PAL
365317-09	MAIN ASSEMBLY A4000T 3F1.44M 3H535MB 2M+4M NTSC
365317-10	MAIN ASSEMBLY A4000T 3F1.44M 3H535MB 2M+4M PAL
365317-11	MAIN ASSEMBLY A4000T 3F1.44M 3H535MB 2M+8M NTSC
365317-12	MAIN ASSEMBLY A4000T 3F1.44M 3H535MB 2M+8M PAL

REVISIONS				
ZN	LTR	DESCRIPTION	DATE	APPROVED
	1	ADVANCE ENGINEERING RELEASE	4/23/93	G. BERLIN

1. SHEET 3 OF 3 SIZE D
ASSY. DWG 365317

c 1993 Commodre Electronics LTD.
INFORMATION CONTAINED HEREIN IS THE UNPUBLISHED AND CONFIDENTIAL PROPERTY OF COMMODORE ELECTRONICS LTD. USE, REPRODUCTION OR DISCLOSURE OF THIS INFORMATION WITHOUT THE PRIOR WRITTEN PERMISSION OF COMMODORE IS STRICTLY PROHIBITED. ALL RIGHTS RESERVED

Commodore	TITLE MAIN ASSEMBLY,A4000T	Drawn by J. Hooper	Drawing # 365317
			Sheet 1 of 3

QUANTITY REQUIRED PER DASH #																								ITM	PART NO.	DESCRIPTION	REF DES / NOTES
25	24	23	22	21	20	19	18	17	16	15	14	13	12	11	10	09	08	07	06	05	04	03	02	01	#			
													1	1	1	1	1	1	1	1	1	1	1	1	1	365316-01	MAIN CHASSIS SUB-ASSEMBLY	
																									2			
													1	1	1	1	1	1	1	1	1	1	1	1	3	365313-01	FLOPPY DISK DRIVE ASSY, 3.5 ", 5.25", 25MM	
													S	S	S	S	S	S	S	S	S	S	S	S	4	365313-02	FLOPPY DISK DRIVE ASSY, 3.5 ", 5.25" , 32MM	SUB FOR ITEM 3
																									5			
													2	2	1	1	2	2	1	1	2	2	1	1	6	391578-01	IC, SIMM MODULE, 1M X 32 80ns	5351, 5352
																									7			
													-	1	-	1	-	1	-	1	-	1	-	1	8	365150-01	PCB ASSEMBLY A4000T, NTSC	
													1	-	1	-	1	-	1	-	1	-	1	-	9	365150-02	PCB ASSEMBLY A4000T, PAL	
																									10			
													1	1	1	1	1	1	1	1	1	1	1	1	11	364856-01	PCB ASSEMBLY, 68040 CPU CARD	
																									12			
													1	1	1	1	1	1	1	1	1	1	1	1	13	365261-01	PCB ASSEMBLY, AUD/VID MODULE	
													1	1	1	1	1	1	1	1	1	1	1	1	14	365257-01	PCB ASSEMBLY, DISK MODULE	
													1	1	1	1	1	1	1	1	1	1	1	1	15	365337-01	PCB ASSEMBLY, PORTS/SCSI TERM. MODULE	
																									16			
													4	4	4	4	4	4	4	4	4	4	4	4	17	364001-01	STANDOFF, PLASTIC	FOR CPU CARD
																									18			
													-	-	-	-	-	-	-	-	1	1	1	1	19	365314-01	HDD ASSEMBLY, 120MB	
													-	-	-	-	1	1	1	1	-	-	-	-	20	365314-02	HDD ASSEMBLY, 240MB	
													1	1	1	1	-	-	-	-	-	-	-	-	21	365314-03	HDD ASSEMBLY, 535MB	
																									22			
													1	1	1	1	1	1	1	1	1	1	1	1	23	314037-02	CABLE ASSEMBLY HDD, 50 PIN SCSI	
													1	1	1	1	1	1	1	1	1	1	1	1	24	380742-04	CABLE ASSEMBLY, FLOPPY	
																									25			
													8	8	8	8	8	8	8	8	8	8	8	8	26	369251-01	STANDOFF, HEX, M/F M3X0.5 /4-40	ITEM 15 TO 1
																									27			
													16	16	16	16	16	16	16	16	16	16	16	16	28	900610-01	SCREW, #6-32X .25 LG.	ITEMS 8, 9, 13, 14 TO 1
																									29			
													1	1	1	1	1	1	1	1	1	1	1	1	30	369619-01	LABEL, HI-CD	
													1	1	1	1	1	1	1	1	1	1	1	1	31	369646-01	LABEL, REAR I/O PORTS LABEL	
													1	1	1	1	1	1	1	1	1	1	1	1	32	369645-01	LABEL, REAR SLOTS	
																									33			
																									34			
																									35			
													-	1	-	1	-	1	-	1	-	1	-	1	36	369644-01	LABEL, RATING - MADE IN PHILIPPINES	120V PRODUCT
													1	-	1	-	1	-	1	-	1	-	1	-	37	369644-02	LABEL, RATING - MADE IN PHILIPPINES	240V PRODUCT
																									38			
													1	1	1	1	1	1	1	1	1	1	1	1	39	312695-03	CABLE ASSEMBLY, SHORT	ITEMS 15 TO 8 OR 9
													1	1	1	1	1	1	1	1	1	1	1	1	40	312695-01	CABLE ASSEMBLY, LONG	ITEMS 15 TO 8 OR 9
																									41			
													1	1	1	1	1	1	1	1	1	1	1	1	42	365316-01	BEZEL, ASSEMBLY	
																									43			
																									44			
																									45			
																									46			
																									47			
																									48			
																									49			
																									50			

Commodore	Title: MAIN ASSEMBLY,A4000T	Drawn by: J. HOOPER	Drawing #: 365317 REV: 1
			Sheet 2 of 3

PART NUMBER	DESCRIPTION
365318-01	MAIN CHASSIS SUB-ASSEMBLY (ENLIGHT)

REVISIONS				
ZN	LTR	DESCRIPTION	DATE	APPROVED
	1	ADVANCE ENGINEERING RELEASE	4-23-93	R. Burle

1. SHEET 3 OF 3 SIZE D
ASSY. DWG 365318

© 1993 Commodre Electronics LTD.
INFORMATION CONTAINED HEREIN IS THE UNPUBLISHED AND CONFIDENTIAL PROPERTY OF COMMODORE ELECTRONICS LTD. USE, REPRODUCTION OR DISCLOSURE OF THIS INFORMATION WITHOUT THE PRIOR WRITTEN PERMISSION OF COMMODORE IS STRICTLY PROHIBITED. ALL RIGHTS RESERVED

Commodore	TITLE MAIN CHASSIS SUB-ASSY	Drawn by J. Hooper	Drawing # 365318
			Sheet 1 of 3

QUANTITY REQUIRED PER DASH #																								ITM #	PART NO.	DESCRIPTION	REF DES / NOTES
25	24	23	22	21	20	19	18	17	16	15	14	13	12	11	10	09	08	07	06	05	04	03	02	01			
																								1	1	TBD	CHASSIS BOTTOM SET ASSEMBLY	ENLIGHT # 5205490
																									2		
																								1	3	TBD	CONTROL PANEL	ENLIGHT # 5401679
																									4		
																								1	5	TBD	FOOTSTAND ASSEMBLY	ENLIGHT # 5101683
																									6		
																								1	7	TBD	TOP COVER	ENLIGHT # 5204053
																									8		
																								1	9	391699-01	POWER SUPPLY	ENLIGHT # 8253369
																									10		
																								1	11	TBD	PARTS BOX ASSEMBLY	ENLIGHT # 5500774
																									12		
																								1	13	TBD	HDD BRACKET ASSEMBLY	ENLIGHT # 5202752
																									14		
																								1	15	TBD	SPEAKER ASSEMBLY	ENLIGHT # 5400038
																								1	16	TBD	SPEAKER STAND	ENLIGHT # 3401035
																									17		
																								6	18	TBD	ADAPTER PLATE(OPTION CARD BRACKET)	ENLIGHT # 3203397
																								6	19	TBD	PCB GUIDE	ENLIGHT # 3103541
																								2	20	TBD	COVER PLATE I/O 25 PIN	ENLIGHT # 3203394
																								2	21	TBD	COVER PLATE I/O 9 PIN	ENLIGHT # 3203396
																									22		
																								2	23	TBD	COVER PLATE FDD	ENLIGHT # 3205782
																								1	24	TBD	DISK COVER HDD	ENLIGHT # 3505771
																									25		
																								1	26	TBD	FAN	ENLIGHT # 3402067
																								1	27	TBD	FAN FILTER	ENLIGHT # 3103175
																									28		
																								14	29	TBD	METAL COLUMN (STANDOFF #6-32X.25")	ENLIGHT # 3502549
																								1	30	TBD	SCREW M3 X 8	For Item 16 ENLIGHT # 3501216
																								4	31	TBD	SCREW FLAT HEAD #6-32X16	For Items 26 & 27 Enlight # 3501201
																								7	32	TBD	SCREW HEX HEAD #6-32X8	For # 13,23,24 to 1 Enlight #3501093
																								13	33	TBD	SCREW HEX HEAD #6-32X9	For # 18 & 7 to 1 Enlight # 3501557
																								6	34	TBD	SCREW TAPPING #6-32X6	For # 3 & 9 to 1 Enlight # 3500703
																									35		
																								1	36	TBD	BAG, ANTISTATIC	ENLIGHT # 3603184
																								1	37	TBD	PACKING BOX	
																								2	38	TBD	FOAM END CAPS	
																									39		
																									40		
																									41		
																									42		
																									43		
																									44		
																									45		
																									46		
																									47		
																									48		
																									49		
																									50		

Commodore	Title MAIN CHASSIS SUB-ASSY	Drawn by J. HOOPER	Drawing # 365318 REV 1
			Sheet 2 of 3

PORTS MODULE

REVISIONS				
ZONE	LTR	DESCRIPTION	DATE	APPROVED
	1	ADVANCE ENGINEERING RELEASE	4-27-93	JCB

SOLDER (BACK OF BOARD) VIEW

(FROM INSIDE CASE)

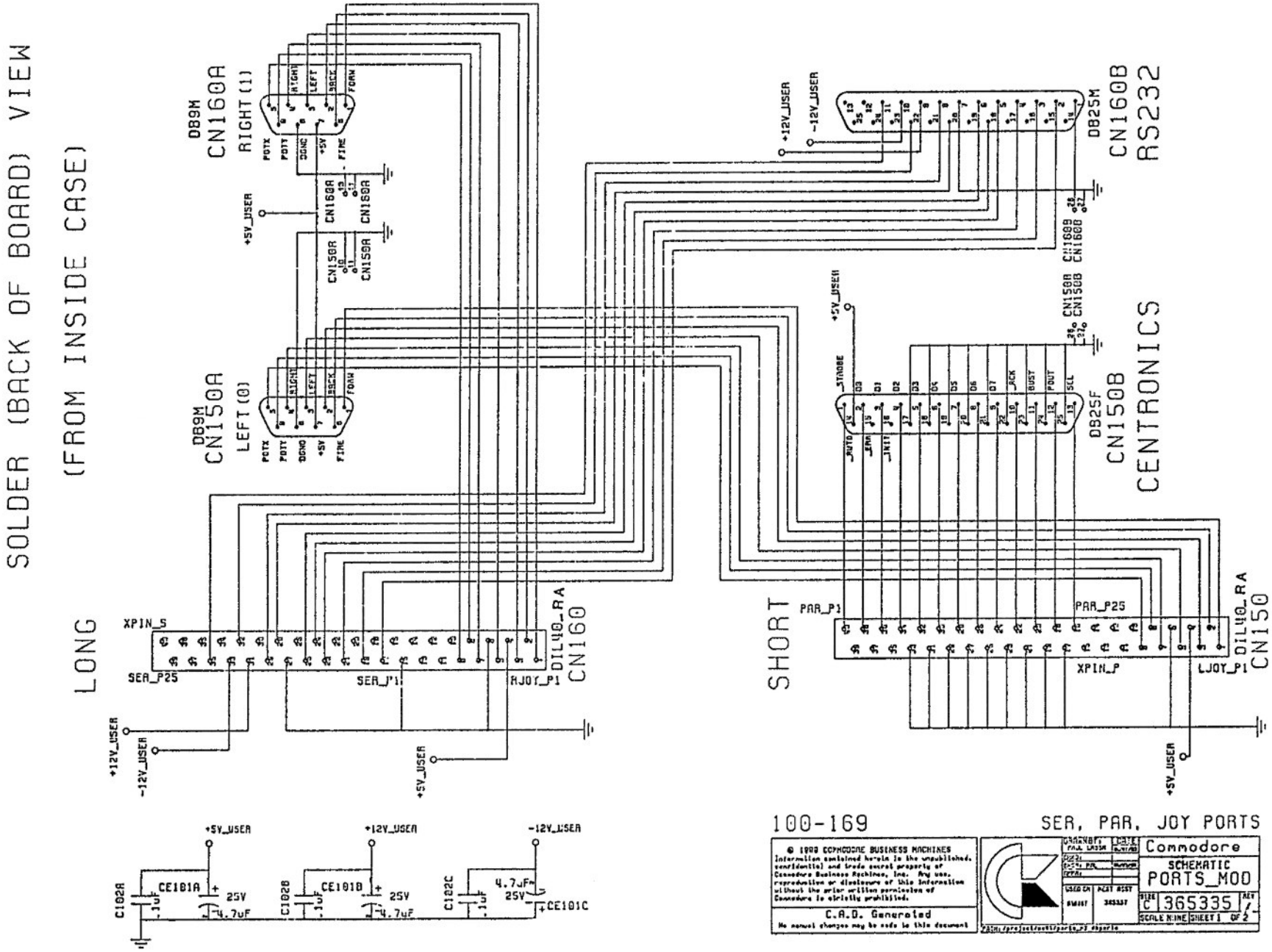

100-169 SER, PAR, JOY PORTS

© 1993 COMMODORE BUSINESS MACHINES
Information contained herein is the unpublished, confidential and trade secret property of Commodore Business Machines, Inc. Any use, reproduction or disclosure of this information without the prior written permission of Commodore is strictly prohibited.

C.A.D. Generated
No manual changes may be made to this document

Commodore
SCHEMATIC
PORTS_MOD
SIZE C 365335 REV 1
SCALE X:NONE SHEET 1 OF 2

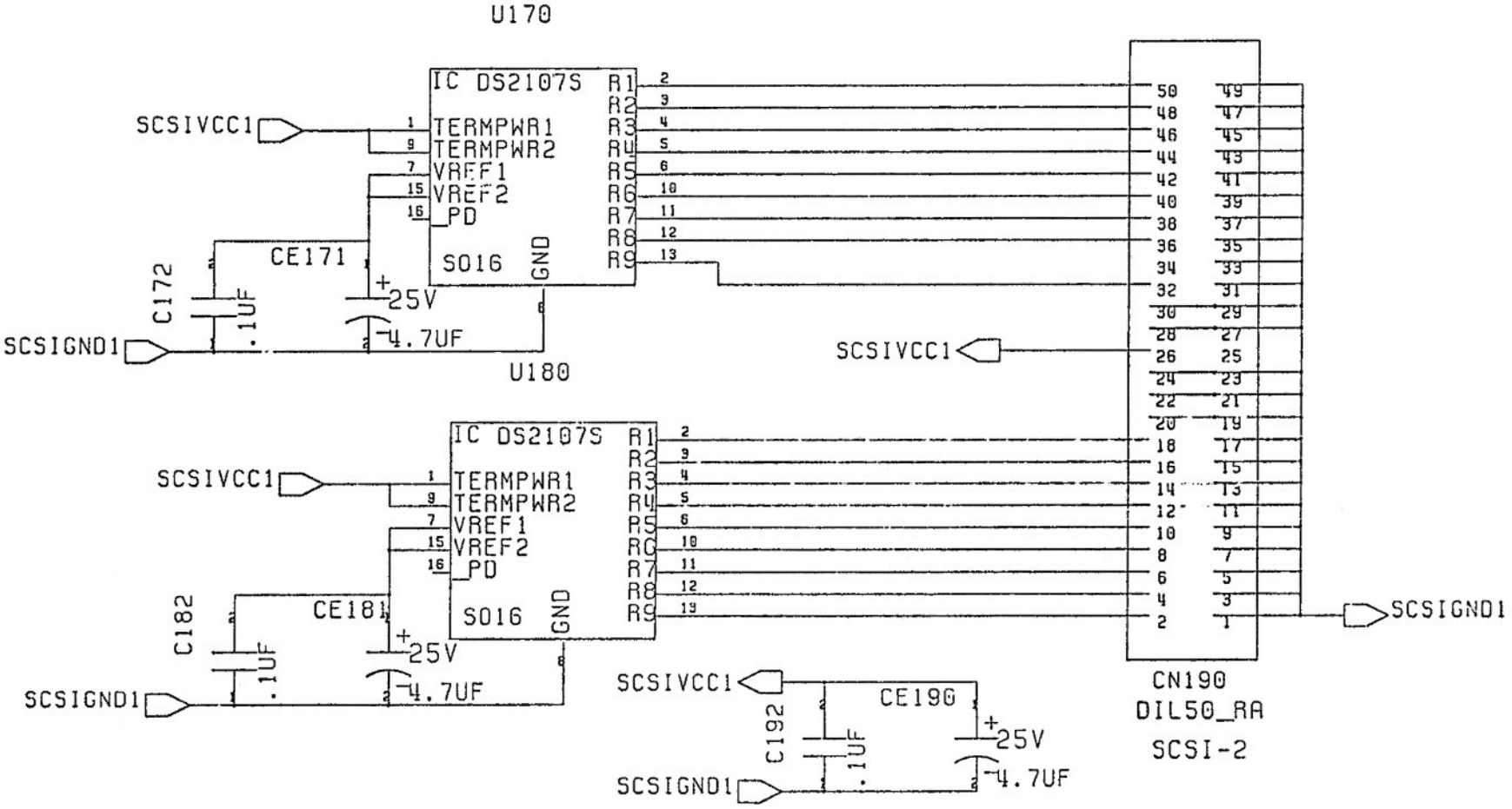

170-199

SCSI TERMINATION

© 1990 COMMODORE BUSINESS MACHINES
Information contained herein is the unpublished, confidential and trade secret property of Commodore Business Machines, Inc. Any use, reproduction or disclosure of this information without the prior written permission of Commodore is strictly prohibited.

C.A.D. Generated
No manual changes may be made to this document

DRAWN BY: DAVE HAYNIE	DATE 5/25/92	Commodore
CHKD:		SCHEMATIC
ENGR: PAL	04/05/93	PORTS_MOD
APPR:		
REFERENCE GROUP		SIZE C 365335 REV 1
USED ON A4000T	NEXT ASST 365397	SCALE NONE SHEET 2 OF 2

PATH: /project/cc41/ports_n7 scsitern

PART NUMBER	DESCRIPTION	REVISIONS				
		ZN	LTR	DESCRIPTION	DATE	APPROVED
365337-01	PCB Assembly, A4000T PORTS Module		1	Advance Engineering Release	4/23/93	D. Bradley

c 1993 COMMODORE ELECTRONICS LTD.
INFORMATION CONTAINED HEREIN IS THE UNPUBLISHED AND
CONFIDENTIAL PROPERTY OF COMMODORE ELECTRONICS LTD.
USE, REPRODUCTION OR DISCLOSURE OF THIS INFORMATION
WITHOUT THE PRIOR WRITTEN PERMISSION OF COMMODORE
IS STRICTLY PROHIBITED ALL RIGHTS RESERVED

Commodore	PCB Assembly, A4000T PORTS Module	Drawn by P. Lassa	Drawing # 365337
			Sheet 1 of 2

QTY. REQ. PER DASH #										ITM	PART NO.	DESCRIPTION	REF DES / NOTES
10	09	08	07	06	05	04	03	02	01	#			
									R	1	365335-01	SCHEMATIC	
									R	2	365338-01	PCB FAB	
									1	3	365336-01	ARTWORK	
										4			
										5		INTEGRATED CIRCUITS	
									2	6	391597-01	IC, DS2107S; SCSI TERMINATOR (SO16)	U170,U180
										7			
										8		CAPACITORS	
									6	9	310027-02	CAP, SM, Z5U, .1UF (1206)	C102A-C,C172,C182,C192
										10			
									6	11	391097-06	CAP, ELECT ALUM, 4.7UF, 25V (A)	CE101A-C,CE171,CE181,CE190
										12			
										13		CONNECTORS	
									1	14	390241-05	D-SUB, 25 PIN, Female, PARALLEL (VERT/HPROF)	CN150B
									1	15	390242-05	D-SUB, 25 PIN, Male, SERIAL (VERT/HPROF)	CN160B
									2	16	390242-01	D-SUB, 9 PIN, Male, JOY/MOUSE (VERT/HPROF)	CN150A,CN160A
									2	17	390224-03	DIL40_RA, U/P, DUAL ROW POST HEADER (RA)	CN150,CN160
									1	18	391621-01	DIL50_RA, Polarized, Shrouded (SCSI-2)	CN190
										19			
										20			
										21			
										22			
										23			
										24			
										25			
										26			
										27			
										28			
										29			
										30			
										31			
										32			
										33			
										34			
										35			
										36			
										37			
										38			
										39			
										40			
										41			
										42			
										43			
										44			
										45			
										46			
										47			
										48			
										49			
										50			

Commodore	Title: PCB Assembly, A4000T PORTS Module	Drawn by: P. Lassa	Drawing #: 365337 REV: 1
			Sheet 2 of 2

Part Number	Description
534810-01	A4000T/040 3F1.44M 3H120MB 2M + 4M NTSC
534810-02	A4000T/040 3F1.44M 3H120MB 2M + 4M PAL
534810-03	A4000T/040 3F1.44M 3H120MB 2M + 8M NTSC
534810-04	A4000T/040 3F1.44M 3H120MB 2M + 8M PAL
534810-05	A4000T/040 3F1.44M 3H240MB 2M + 4M NTSC
534810-06	A4000T/040 3F1.44M 3H240MB 2M + 4M PAL
534810-07	A4000T/040 3F1.44M 3H240MB 2M + 8M NTSC
534810-08	A4000T/040 3F1.44M 3H240MB 2M + 8M PAL
534810-09	A4000T/040 3F1.44M 3H535MB 2M + 4M NTSC
534810-10	A4000T/040 3F1.44M 3H535MB 2M + 4M PAL
534810-11	A4000T/040 3F1.44M 3H535MB 2M + 8M NTSC
534810-12	A4000T/040 3F1.44M 3H535MB 2M + 8M PAL

Revisions

Zn	Ltr	Description	Date	Approved
	1	ADVANCE ENGINEERING RELEASE	4/23/93	G. BERLIN

1. Sheet 3 of 3 Size
   Assembly Drawing: 534810
Notes:

© 1993 Commodore Electronics, Ltd.
Information contained herin is the unpublished and confidential property of Commodore Electronics, Ltd. Use, reproduction or disclosure of this information without the prior written permission of Commodore is strictly prohibited. All rights reserved

Commodore	Title: A4000T/040	Drawn by APH	Drawing # 534810 Sheet 1 of 3

Quantity Required Per Dash Number																									Item #	Part Number	Description	Reference Designators/ Notes
25	24	23	22	21	20	19	13	17	16	15	14	13	12	11	10	09	08	07	06	05	04	03	02	01				
													-	-	-	-	-	-	-	-	-	-	-	1	1	365317-01	MAIN ASSY, A4000T/040 120MB HD 2M + 4M	
													-	-	-	-	-	-	-	-	-	-	1	-	2	365317-02	MAIN ASSY, A4000T/040 120MB HD 2M + 4M	
													-	-	-	-	-	-	-	-	-	1	-	-	3	365317-93	MAIN ASSY, A4000T/040 120MB HD 2M + 8M	
													-	-	-	-	-	-	-	-	1	-	-	-	4	365317-04	MAIN ASSY, A4000T/040 120MB HD 2M + 8M	
													-	-	-	-	-	-	-	1	-	-	-	-	5	365317-05	MAIN ASSY, A4000T/040 240MB HD 2M + 4M	
													-	-	-	-	-	-	1	-	-	-	-	-	6	365317-06	MAIN ASSY, A4000T/040 240MB HD 2M + 4M	
													-	-	-	-	-	1	-	-	-	-	-	-	7	365317-07	MAIN ASSY, A4000T/040 240MB HD 2M + 8M	
													-	-	-	-	1	-	-	-	-	-	-	-	8	365317--8	MAIN ASSY, A4000T/040 240MB HD 2M + 8M	
													-	-	-	1	=	-	-	-	-	-	-	-	9	365317-09	MAIN ASSY, A4000T/040 535MB HD 2M + 4M	
													-	-	1	-	=	-	-	-	-	-	-	-	10	365317-10	MAIN ASSY, A4000T/040 535MB HD 2M + 4M	
													-	1	-	-	=	-	-	-	-	-	-	-	11	365317-11	MAIN ASSY, A4000T/040 535MB HD 2M + 8M	
													1	-	-	-	=	-	-	-	-	-	-	-	12	365317-12	MAIN ASSY, A4000T/040 535MB HD 2M + 8M	
																									13			
													1	1	1	1	1	1	1	1	1	1	1	1	14	365361-01	BOX, PACKING	
													2	2	2	2	2	2	2	2	2	2	2	2	15	365395-01	ENDCAP	
																									16			
													1	1	1	1	1	1	1	1	1	1	1	1	17	OEM	BOX, ACCESSORY	ENLIGHT SUPPLIED
													1	1	1	1	1	1	1	1	1	1	1	1	18	OEM	SUPPORT FOOT	ENLIGHT SUPPLIED
																									19			
													1	1	1	1	1	1	1	1	1	1	1	1	20	390382-01	VIDEO ADAPTER	
																									21			
													-	1	-	1	-	1	-	1	-	1	-	1	22	369644-01	LABEL, RATING, MADE IN PHILIPPINES	FCC
													1	-	1	-	1	-	1	-	1	-	1	-	23	369644-02	LABEL, RATING, MADE IN PHILIPPINES	VDE
													S	-	S	-	S	-	S	-	S	-	S	-	24	369644-03	LABEL, RATING, MADE IN PHILIPPINES	SUB FOR ITEM 24 FOR BRAZIL ONLY
																									25			
													-	-	-	-	-	-	-	-	-	-	-	1	26	369647-01	LABEL, UPC 3F1.44M 120MB HD 2M + 4M	
													-	-	-	-	-	-	-	-	-	1	-	-	27	369647-02	LABEL, UPC 3F1.44M 120MB HD 2M + 8M	
													-	-	-	-	-	-	-	1	-	-	-	-	28	369647-03	LABEL, UPC 3F1.44M 240MB HD 2M + 4M	
													-	-	-	-	-	1	-	-	-	-	-	-	29	369647-04	LABEL, UPC 3F1.44M 240MB HD 2M + 8M	
													-	-	-	1	-	-	-	-	-	-	-	-	30	369647-05	LABEL, UPC 3F1.44M 535MB HD 2M + 4M	
													-	1	-	-	-	-	-	-	-	-	-	-	31	369647-06	LABEL, UPC 3F1.44M 535MB HD 2M + 8M	
																									32			
																									33			
																									34			
																									35			
													1	1	1	1	1	1	1	1	1	1	1	1	36	325090-02	SEAL, WARRANTY	
													-	2	-	2	-	2	-	2	-	2	-	2	37	354084-01	SEAL, TAMPER EVIDENT	
																									38			
																									39			
																									40			
																									41			
																									42			
																									43			
													1	1	1	1	1	1	1	1	1	1	1	1	44	251006-01	BAG, PLASTIC	FOR KEYLOCK KEYS
													1	1	1	1	1	1	1	1	1	1	1	1	45	320408-04	BAG, FLAT, 650mm x 650mm	FOR CPU
													1	1	1	1	1	1	1	1	1	1	1	1	46	324257-01	BAG, DRYING AGENT	PLACE IN ITEM 45
																									47			
													1	1	1	1	1	1	1	1	1	1	1	1	48	366610-01	LABEL, HEAVY LIFT WARNING	
													2	2	2	2	2	2	2	2	2	2	2	2	49	366648-01	LABEL, BAR CODE, BLANK	
																									50			

Commodore	Title: A4000T/040	Drawn by	Drawing # 534810 Rev 1
		APH	Sheet 2 of 3

Part Number	Description
582028-01	KEYBOARD SHIPPING ASSY. A4000T/040 US
582028-02	KEYBOARD SHIPPING ASSY. A4000T/040 CN
582028-03	KEYBOARD SHIPPING ASSY. A4000T/040 UK
582028-04	KEYBOARD SHIPPING ASSY. A4000T/040 GR
582028-05	KEYBOARD SHIPPING ASSY. A4000T/040 FR
582028-06	KEYBOARD SHIPPING ASSY. A4000T/040 IT
582028-07	KEYBOARD SHIPPING ASSY. A4000T/040 SP
582028-08	KEYBOARD SHIPPING ASSY. A4000T/040 SF
582028-09	KEYBOARD SHIPPING ASSY. A4000T/040 SG
582028-10	KEYBOARD SHIPPING ASSY. A4000T/040 AU
582028-11	KEYBOARD SHIPPING ASSY. A4000T/040 NR
582028-12	KEYBOARD SHIPPING ASSY. A4000T/040 SD
582028-13	KEYBOARD SHIPPING ASSY. A4000T/040 FN
582028-14	KEYBOARD SHIPPING ASSY. A4000T/040 NE
582028-15	KEYBOARD SHIPPING ASSY. A4000T/040 DN
582028-16	KEYBOARD SHIPPING ASSY. A4000T/040 BF
582028-17	KEYBOARD SHIPPING ASSY. A4000T/040 BD
582028-18	KEYBOARD SHIPPING ASSY. A4000T/040 AL
582028-19	KEYBOARD SHIPPING ASSY. A4000T/040 CEL
582028-20	KEYBOARD SHIPPING ASSY. A4000T/040 PG
582028-21	KEYBOARD SHIPPING ASSY. A4000T/040 JP
582028-22	KEYBOARD SHIPPING ASSY. A4000T/040 INT NOT USED
582028-23	KEYBOARD SHIPPING ASSY. A4000T/040 LA NTSC
582028-24	KEYBOARD SHIPPING ASSY. A4000T/040 PD NOT USED
582028-25	KEYBOARD SHIPPING ASSY. A4000T/040 LA PAL
582028-26	KEYBOARD SHIPPING ASSY. A4000T/040 BRAZIL
582028-27	KEYBOARD SHIPPING ASSY. A4000T/040 SI

Revisions				
Zn	Ltr	Description	Date	Approved
	1	ADVANCE ENGINEERING RELEASE	4-27-93	

© 1993 Commodore Electronics, Ltd.
Information contained herin is the unpublished and confidential property of Commodore Electronics, Ltd Use, reproduction or disclosure of this information without the prior written permission of Commodore is strictly prohibited. All rights reserved

Commodore	Title: KEYBOARD SHIPPING ASSEMBLY, A4000T/040	Drawn by: APH	Drawing # 582028 Sheet 1 of 3

Quantity Required Per Dash Number																								Item #	Part Number	Description	Reference Designators/ Notes
27	26	25	23	21	20	19	18	17	16	15	14	13	12	11	10	09	08	07	06	05	04	03	02	01			
-	1	-	-	1	1	1	-	1	-	-	1	-	-	-	-	-	-	-	-	-	-	-	1	1	1	365347-01	KEYBOARD ASSEMBLY, A4000T/040	US
-	-	-	-	-	-	-	1	-	-	-	-	-	-	-	-	-	-	-	-	-	-	1	-	-	2	365347-02	KEYBOARD ASSEMBLY, A4000T/040	UK
-	-	-	-	-	-	-	-	-	-	-	-	-	-	-	1	-	-	-	-	-	1	-	-	-	3	365347-03	KEYBOARD ASSEMBLY, A4000T/040	GR
-	-	-	-	-	-	-	-	-	1	-	-	-	-	-	-	-	-	-	-	1	-	-	-	-	4	365347-04	KEYBOARD ASSEMBLY, A4000T/040	FR
-	-	-	-	-	-	-	-	-	-	-	-	-	-	-	-	-	-	-	1	-	-	-	-	-	5	365347-05	KEYBOARD ASSEMBLY, A4000T/040	IT
-	-	1	1	-	-	-	-	-	-	-	-	-	-	-	-	-	-	1	-	-	-	-	-	-	6	365347-06	KEYBOARD ASSEMBLY, A4000T/040	SP
1	-	-	-	-	-	-	-	-	-	-	-	-	-	-	-	1	1	-	-	-	-	-	-	-	7	365347-07	KEYBOARD ASSEMBLY, A4000T/040	SWISS
-	-	-	-	-	-	-	-	-	-	-	-	-	-	1	-	-	-	-	-	-	-	-	-	-	8	365347-08	KEYBOARD ASSEMBLY, A4000T/040	NR
-	-	-	-	-	-	-	-	-	-	-	-	1	1	-	-	-	-	-	-	-	-	-	-	-	9	365347-09	KEYBOARD ASSEMBLY, A4000T/040	SD/FN
-	-	-	-	-	-	-	-	-	-	1	-	-	-	-	-	-	-	-	-	-	-	-	-	-	10	365347-10	KEYBOARD ASSEMBLY, A4000T/040	DN
																									11			
2	2	2	2	2	2	2	2	2	2	2	2	2	2	2	2	2	2	2	2	2	2	2	2	2	12	318243-01	ENDCAP	
1	1	1	1	1	1	1	1	1	1	1	1	1	1	1	1	1	1	1	1	1	1	1	1	1	13	380425-03	BOX, SHIPPING	
1	1	1	1	1	1	1	1	1	1	1	1	1	1	1	1	1	1	1	1	1	1	1	1	1	14	251006-02	BAG, FLAT, 560mm x 350mm	
1	1	1	1	1	1	1	1	1	1	1	1	1	1	1	1	1	1	1	1	1	1	1	1	1	15	324257-07	TAPE, ADHESIVE, TRANSPARANT, 50mm	
																									16			
-	-	-	-	-	-	-	-	-	-	-	-	-	-	-	-	-	-	-	-	-	-	-	1	1	17	313254-04	MOUSE ASSEMBLY, 2.4M WITH FERRITE	
1	1	1	1	1	1	1	1	1	1	1	1	1	1	1	1	1	1	1	1	1	1	-	-		18	313254-03	MOUSE ASSEMBLY, 2.4M W/O FERRITE	
																									19			
1	1	1	1	1	1	1	1	1	1	1	1	1	1	1	1	1	1	1	1	1	1	1	1	1	20	365383-01	S/W ASSEMBLY, AMIGA, LEVEL 3, V3.1	ENGLISH
																									21			
																									22			
																									23			
																									24			
																									25			
																									26			
-	-	-	-	-	-	-	-	-	-	-	-	-	-	-	-	-	-	-	-	-	-	-	1	1	27	369640-01	LABEL, UPC	
																									28			
-	-	-	-	-	-	-	-	-	-	-	-	-	-	-	-	-	-	-	-	-	-	-	1	1	29	903508-25	POWER CORD, BLACK	US/CN/BZ
-	-	-	-	-	-	-	-	-	-	-	-	-	-	-	-	-	-	-	-	-	-	1	-	-	30	903508-21	POWER CORD, BLACK	DSI
-	1	1	1	1	1	1	-	1	1	1	1	1	1	1	1	1	-	-	1	1	1	-	-	-	31	903508-19	POWER CORD, BLACK	VDE
1	-	-	-	-	-	-	-	-	-	-	-	-	-	-	-	-	1	1	-	-	-	-	-	-	32	903509-20	POWER CORD, BLACK	SEV
-	-	-	-	-	-	-	1	-	-	-	-	-	-	-	-	-	-	-	-	-	-	-	-	-	33	903503-22	POWER CORD, BLACK	SAA
																									34			
																									35			
-	-	-	-	-	-	-	-	-	-	-	-	-	-	-	-	-	-	-	-	-	-	-	-	1	36	400804-01	SERVICE SUB ASSEMBLY	US
-	-	-	-	-	-	-	-	-	-	-	-	-	-	-	-	-	-	-	-	-	-	-	1	-	37	318382-02	WARRANTY CARD	CN
-	-	-	-	-	-	-	-	-	-	-	-	-	-	-	-	-	-	-	-	-	-	1	-	-	38	369270-01	WARRANTY CARD	UK
-	-	-	-	-	-	-	-	-	-	-	-	-	-	-	-	-	-	-	-	-	1	-	-	-	39	320046-06	WARRANTY CARD	GR
-	-	-	-	-	-	-	-	-	-	-	-	-	-	-	-	-	-	-	-	1	-	-	-	-	40	325254-01	WARRANTY CARD	FR
1	-	-	-	-	-	-	-	-	-	-	-	-	-	-	-	1	1	-	-	-	-	-	-	-	41	360933-01	WARRANTY CARD	SWISS
																									42			
-	-	-	-	-	-	-	1	-	-	-	-	-	-	-	-	-	-	-	-	-	-	-	-	-	43	318876-03	SERVICE CENTER LIST	AL
1	1	1	1	1	1	1	1	1	1	1	1	1	1	1		1		1	1	1		1	1	1	44	318696-05	SOFTWARE LICENSE AGREEMENT	INT
-	-	-	-	-	-	-	-	-	-	-	-	-	-	-	1	-	1	-	-	-	1	-	-	-	45	319708-01	SOFTWARE LICENSE AGREEMENT	GR
																									46			
-	-	-	-	-	-	-	-	-	-	-	-	-	-	-	-	-	-	-	-	-	-	-	-	1	47	312541-02	DISK EXCHANGE CARD	US
-	-	-	-	-	-	-	-	-	-	-	-	-	-	-	-	-	-	-	-	-	-	1	-	-	48	318656-02	DISK EXCHANGE CARD	CN
																									49			
																									50			

Commodore	Title: KEYBOARD SHIPPING ASSY , A4000T/040	Drawn by	Drawing # / Rev
		APH	582028 / 1
			Sheet 2 of 3

Quantity Required Per Dash Number																								Item #	Part Number	Description	Reference Designators/ Notes
27	26	25	23	21	20	19	18	17	16	15	14	13	12	11	10	09	08	07	06	05	04	03	02	01				
1	1	1	1	1	1	1	1	1	1	1	1	1	1	1	1	1	1	1	1	1	1	1	1	1	51	371188-01	USER'S GUIDE, A4000T/040	ENGLISH
																									52			
																									53			
																									54			
																									55			
																									56			
																									57			
																									58			
																									59			
1	1	1	1	1	1	1	1	1	1	1	1	1	1	1	1	1	1	1	1	1	1	1	1	1	60	371235-01	MANUAL, HARD DISK USER'S GUIDE	ENGLISH
																									61			
																									62			
																									63			
																									64			
																									65			
																									66			
																									67			
																									68			
																									69			
																									70			
																									71			
																									72			
																									73	366981-01	CARTON LABEL	US
																									74	366981-02	CARTON LABEL	CN
																									75	366981-03	CARTON LABEL	UK
																									76	366981-04	CARTON LABEL	GR
																									77	366981-05	CARTON LABEL	FR
																									78	366981-06	CARTON LABEL	IT
																									79	366981-07	CARTON LABEL	SP
																									80	366981-08	CARTON LABEL	SG
																									81	366981-09	CARTON LABEL	SF
																									82	366981-10	CARTON LABEL	AU
																									83	366981-11	CARTON LABEL	NR
																									84	366981-12	CARTON LABEL	SD
																									85	366981-13	CARTON LABEL	FN
																									86	366981-14	CARTON LABEL	NE
																									87	366981-15	CARTON LABEL	DN
																									88	366981-16	CARTON LABEL	BF
																									89	366981-17	CARTON LABEL	BD
																									90	366981-18	CARTON LABEL	AL
																									91	366981-19	CARTON LABEL	CEL
																									92	366981-20	CARTON LABEL	FG
																									93	366981-21	CARTON LABEL	JP
																									94	366981-23	CARTON LABEL	LA NTSC
																									95	366981-25	CARTON LABEL	LA PAL
																									96	366981-26	CARTON LABEL	BZ
																									97	366981-27	CARTON LABEL	SI
																									98			
																									99			
																									100			

Commodore	Title: KEYBOARD SHIPPING ASSY., A400T/040	Drawn by	Drawing #	Rev
		APH	582028	1
			Sheet 3 of 3	

ZONE	LTR	DESCRIPTION	DATE	APPROVED
	1	PRELIMINARY ENGINEERING RELEASE		
	2	ADDED COMMODORE PART NUMBER		
	3	ADVANCE ENGINEERING RELEASE	8/11/92	[illegible]

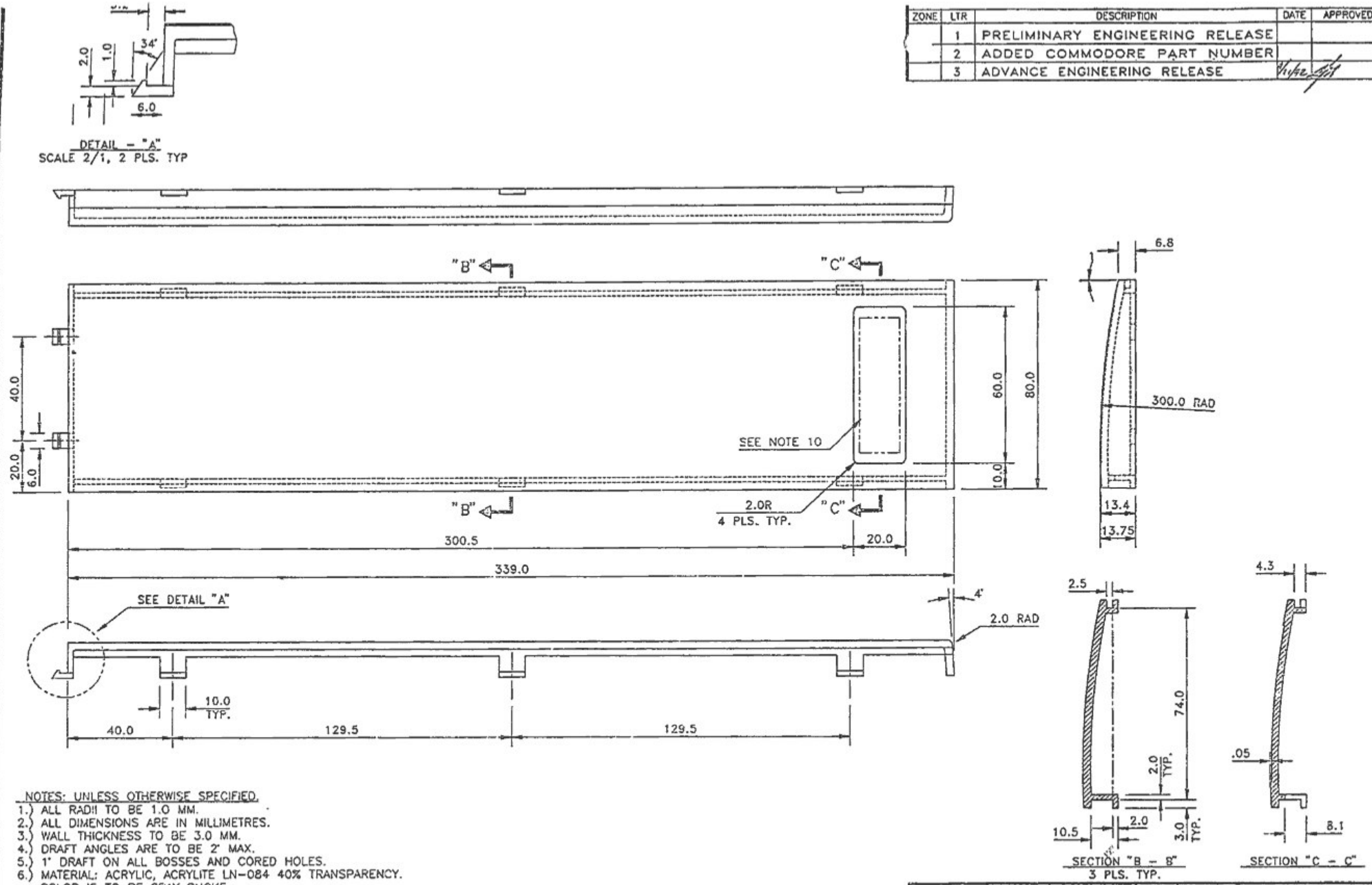

NOTES: UNLESS OTHERWISE SPECIFIED.

1.) ALL RADII TO BE 1.0 MM.
2.) ALL DIMENSIONS ARE IN MILLIMETRES.
3.) WALL THICKNESS TO BE 3.0 MM.
4.) DRAFT ANGLES ARE TO BE 2° MAX.
5.) 1° DRAFT ON ALL BOSSES AND CORED HOLES.
6.) MATERIAL: ACRYLIC, ACRYLITE LN-084 40% TRANSPARENCY. COLOR IS TO BE GRAY SMOKE.
7.) FINISH: HIGH GLOSS POLISHED FINISH.
8.) PART IS TO BE FREE TO EXCESSIVE SINK MARKS, FLASH AND ALL OTHER MOLD DEFECTS.
10.) MOLD IN COMMODORE PART NUMBER, REVISION NUMBER, AND DATE ON THE INSIDE SURFACE. ALSO ADD ACRYLIC RECYCLING SYMBOL APPROX. WHERE SHOWN.
11.) LETTERS ARE TO BE HELVETICA REGULAR, RAISED 0.3, 2.0 MM HIGH.
12.) PROTECT OUTSIDE SURFACE WITH SELF-ADHESIVE CLEAR PLASTIC CELLOPHANE.

METRIC

C.A.D. GENERATED
NO MANUAL CHANGES ARE TO BE MADE TO THIS DOCUMENT.

© 1993 COMMODORE ELECTRONICS LTD. INFORMATION CONTAINED HEREIN IS THE UNPUBLISHED AND CONFIDENTIAL PROPERTY OF COMMODORE ELECTRONICS LTD. USE, REPRODUCTION OR DISCLOSURE OF THIS INFORMATION WITHOUT THE PRIOR WRITTEN PERMISSION OF COMMODORE IS STRICTLY PROHIBITED. ALL RIGHTS RESERVED.

UNLESS OTHERWISE SPECIFIED
TOLERANCES ON DIMENSIONS

UNDER 30	±0.1
30 TO 300	±0.2
OVER 300	±0.4

MATERIAL: SEE NOTE 6
FINISH: SEE NOTE 7

DRAWN BY: J. HOOPER — DATE: 12-22-92
CHKD:
ENGR:
APPR:
EXPIRED (DD) BY: JFH — 12-22-92

USED ON: A40001
NEXT ASSY: 365316

Commodore
1200 WILSON DRIVE
WEST CHESTER, PA 19380
(215) 431-9100

DOOR WINDOW

SIZE: C — 365309 — REV: 3
SCALE: 1:1 — SHEET 1 OF 1

REVISIONS				
ZONE	LTR	DESCRIPTION	DATE	APPROVED
	1	PRELIMINARY ENGINEERING RELEASE		
	2	MINOR MODIFICATIONS		
	3	ADDED COMMODORE PART NUMBER		
	4	ADVANCE ENGINEERING RELEASE		

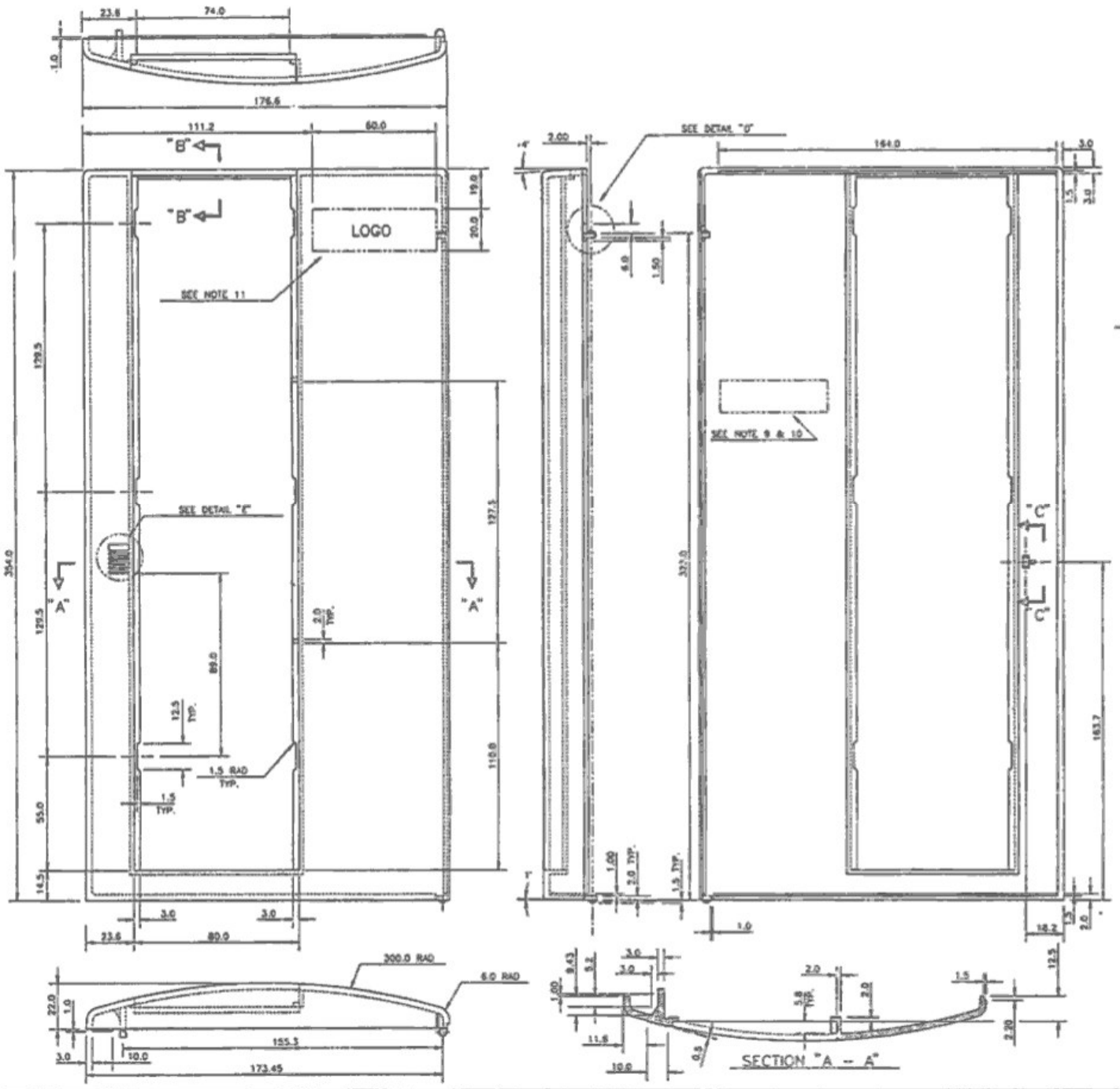

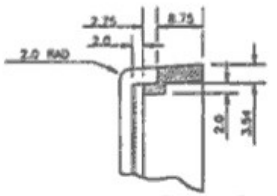

SECTION "B – B"
SCALE 2/1

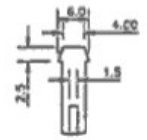

VIEW "C – C"
SCALE 2/1

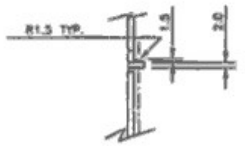

DETAIL – "D"
SCALE 2/1, 2 PLS. TYP.

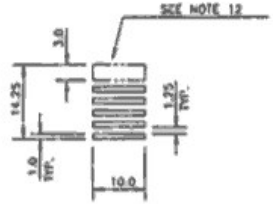

DETAIL – "E"
SCALE 2/1

NOTES: UNLESS OTHERWISE SPECIFIED.
1.) ALL RADII TO BE 1.0 MM.
2.) ALL DIMENSIONS ARE IN MILLIMETRES.
3.) WALL THICKNESS TO BE 3.0 MM.
4.) DRAFT ANGLES ARE TO BE 2° MAX.
5.) 1° DRAFT ON ALL BOSSES AND CORED HOLES.
6.) MATERIAL: ABS CYCOLAC K-3, KJW OR EQUIV, V-0 RATED, COLOR IS TO BE COMMODORE "LIMESTONE BEIGE" PER P/N 363744-01.
7.) FINISH: TEXTURE IS TO BE MEALON SK-105 ON ALL EXTERIOR SURFACES.
8.) PART IS TO BE FREE TO EXCESSIVE SINK MARKS, FLASH AND ALL OTHER MOLD DEFECTS.
9.) MOLD IN COMMODORE PART NUMBER, REVISION NUMBER, AND DATE. ALSO ADD ABS RECYCLING SYMBOL APPROX. WHERE SHOWN.
10.) LETTERS ARE TO BE HELVETICA REGULAR, RAISED 0.3, 2.0 MM HIGH.
11.) THE WORD "AMIGA" SHOULD BE 0.6 DEEP, 20 MM HIGH AND SHOULD HAVE A HIGH POLISHED FINISH. (ARTWORK TO BE SUPPLIED BY COMMODORE)
12.) THE WORD "PUSH" SHOULD BE RAISED 0.5 MM AND BE 3.0 MM HIGH. (ARTWORK TO BE SUPPLIED BY COMMODORE)

METRIC
DATA DESIGNATED
ARE OFFICIAL STANDARD DATA AS
TO BE USED ON THIS DRAWING.

© 1990 COMMODORE ELECTRONICS LTD
CONFIDENTIAL DETAILS OF THE INFORMATION
CONTAINED HEREIN IS THE PROPERTY OF
COMMODORE ELECTRONICS LTD. AND IS NOT TO
BE DISCLOSED TO ANY PERSON OR COMPANY
WITHOUT THE PRIOR WRITTEN PERMISSION OF
COMMODORE ELECTRONICS LTD.

UNLESS OTHERWISE SPECIFIED		Drawn by A. DOOREY	93-01-13
TOLERANCES ON DIMENSIONS		Chk'd	
UNDER 25	±0.1	Eng'r	
25 TO 250	±0.2	Mfg'r	
OVER 250	±0.4	Mgr	
MATERIAL	SEE NOTE 6		
FINISH	SEE NOTE 7		

Commodore
1200 WILSON DRIVE
WEST CHESTER, PA 19380

BEZEL
DOOR

SIZE	DWG NO	REV
D	365310	4

SCALE 1:1 | SHEET 1 OF 1

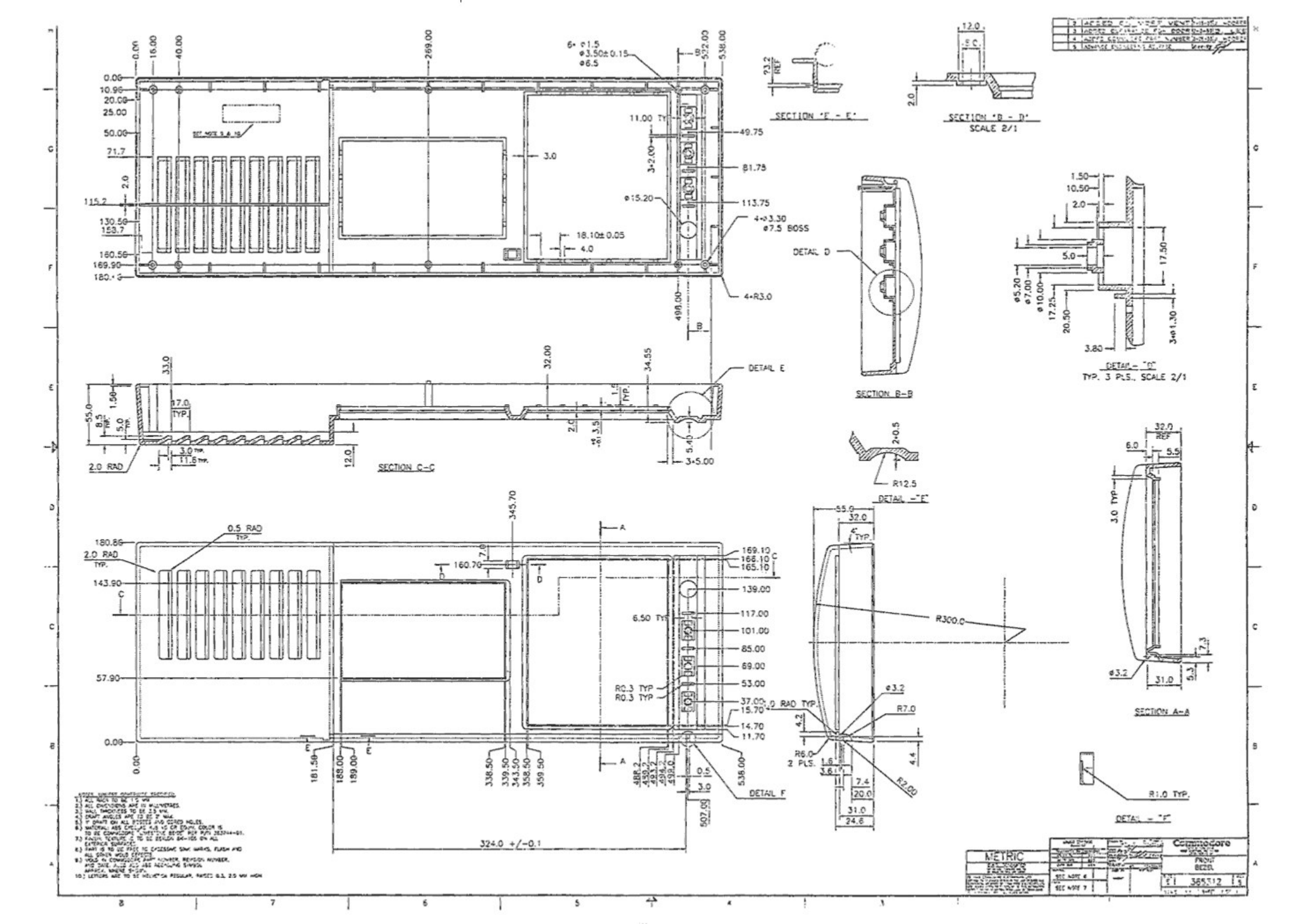
SECTION "F - F"
SECTION "B - D"
SCALE 2/1
DETAIL D
SECTION B-B
DETAIL - "D"
TYP. 3 PLS., SCALE 2/1
SECTION C-C
DETAIL E
DETAIL - "F"
SECTION A-A
DETAIL F
DETAIL - "F"
324.0 +/-0.1
METRIC
FRONT
BEZEL

ZONE	LTR	DESCRIPTION	DATE	APPROVED
	1	PRELIMINARY ENGINEERING RELEASE	3-10-93	J. HOOPER
	2	ADDED COMMODORE PART NUMBER	3-29-93	J. HOOPER
	3	ADVANCE ENGINEERING RELEASE	4/6/93	

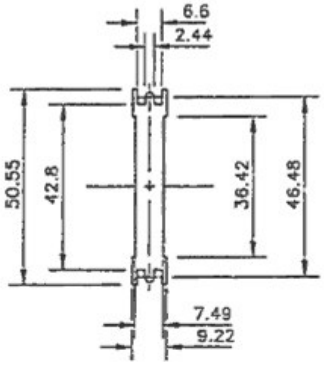

DETAIL " A "

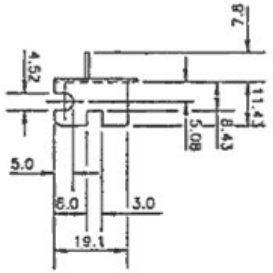

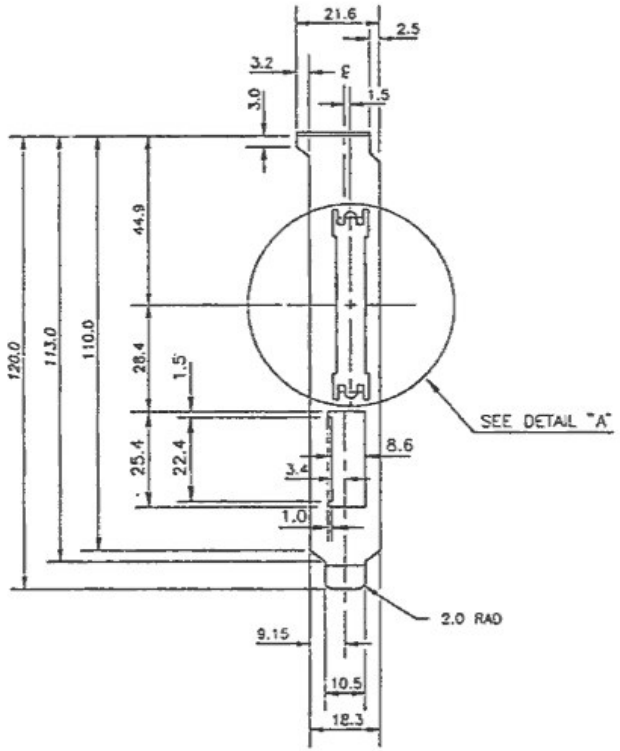

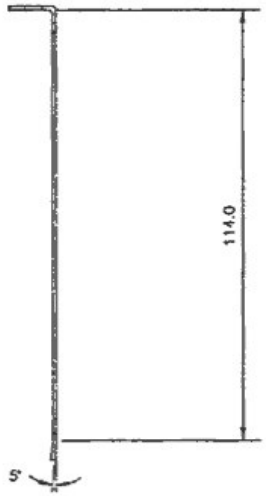

NOTES: UNLESS OTHERWISE SPECIFIED.
1. MATERIAL: 0.8 THK. C.R.S. ZINC PLATED.
2. FINISH: BRIGHT NICKEL.
3.) ALL DIMENSIONS ARE IN MILLIMETERS.
4.) REMOVE ALL BURRS & SHARP EDGES.

METRIC

C.A.D. GENERATED

NO MANUAL CHANGES ARE TO BE MADE TO THIS DOCUMENT.

© 1993 COMMODORE ELECTRONICS LTD.
INFORMATION CONTAINED HEREIN IS THE UNPUBLISHED AND CONFIDENTIAL PROPERTY OF COMMODORE ELECTRONICS LTD. USE, REPRODUCTION OR DISCLOSURE OF THIS INFORMATION WITHOUT THE PRIOR WRITTEN PERMISSION OF COMMODORE IS STRICTLY PROHIBITED. ALL RIGHTS RESERVED

UNLESS OTHERWISE SPECIFIED

TOLERANCES ON DIMENSIONS:
UNDER 30 ±0.1
30 TO 300 ±0.2
OVER 300 ±0.4

DRAWN BY: J. HOOPER 3-10-93
CHKD:
ENGR:
APPR:
ENTERED ECAD BY: JRW 3-10-93

MATERIAL: SEE NOTE #△
FINISH: SEE NOTE #△

USED ON: A40GOT
NEXT ASSY:

Commodore
1200 WILSON DRIVE
WEST CHESTER, PA 19380
(215) 431-3100

OPTION CARD BRACKET

SIZE C | 365347 | REV 3

SCALE 1:1 | SHEET 1 OF 1

4 3 2 1

D C B A

REVISIONS

ZONE	LTR	DESCRIPTION	DATE	APPROVED
	1	PRELIMINARY ENGINEERING RELEASE	3-9-93	J. HOOPER
	2	ADDED COMMODORE PART NUMBER	3-29-93	J. HOOPER
	3	ADVANCE ENGINEERING RELEASE	4/21/93	

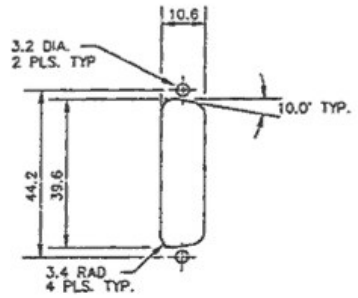

DETAIL "A"
SCALE 1 : 1

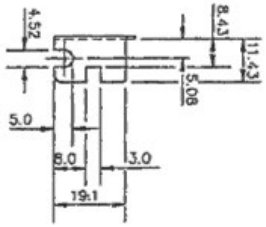

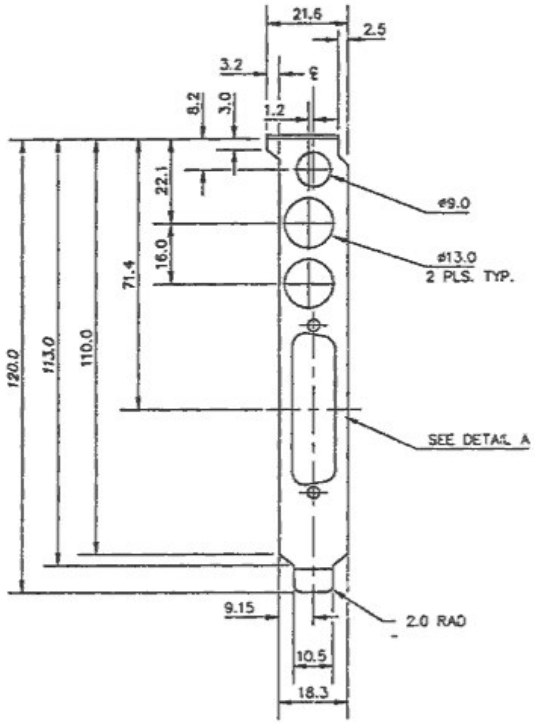

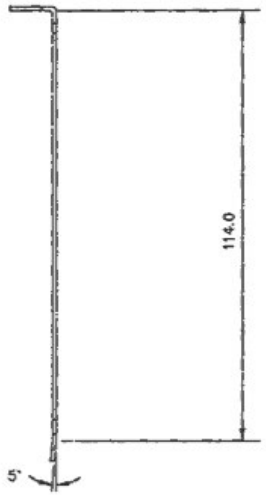

NOTES: UNLESS OTHERWISE SPECIFIED.
⚠ MATERIAL: 0.8 THK. C.R.S. ZINC PLATED.
⚠ FINISH: BRIGHT NICKEL.
3.) ALL DIMENSIONS ARE IN MILLIMETERS.
4.) REMOVE ALL BURRS & SHARP EDGES.

METRIC
C.A.D. GENERATED
NO MANUAL CHANGES ARE TO BE MADE TO THIS DOCUMENT.

© 1993 COMMODORE ELECTRONICS LTD.
INFORMATION CONTAINED HEREIN IS THE UNPUBLISHED AND CONFIDENTIAL PROPERTY OF COMMODORE ELECTRONICS LTD. USE, REPRODUCTION OR DISCLOSURE OF THIS INFORMATION WITHOUT THE PRIOR WRITTEN PERMISSION OF COMMODORE IS STRICTLY PROHIBITED. ALL RIGHTS RESERVED

UNLESS OTHERWISE SPECIFIED

TOLERANCES ON DIMENSIONS	
UNDER 30	±0.1
30 TO 300	±0.2
OVER 300	±0.4

MATERIAL: SEE NOTE # ⚠
FINISH: SEE NOTE # ⚠

DRAWN BY: J. HOOPER 3-9-93
CHKD:
ENGR:
APPR:
CHECKED (CAD) BY: JRH 3-9-93
USED ON: A4000T
NEXT ASSY

Commodore
1200 WILSON DRIVE
WEST CHESTER, PA 19380
(215) 431-9100

OPTION CARD
BRACKET

SIZE C | 365348 | REV 3
SCALE 1:1 | SHEET 1 OF 1

PART NUMBER	DESCRIPTION	MADE IN
369644-01	NORTH AMERICAN VERSION	PHILIPPINES
369644-02	EUROPEAN AND AUSTRALIAN VERSION	PHILIPPINES
369644-03	BRAZILIAN VERSION	PHILIPPINES

REVISIONS

ZONE	REV	DESCRIPTION	DATE	APPROVED
	1	ADVANCE ENGINEERING RELEASE	4-23-93	AcB

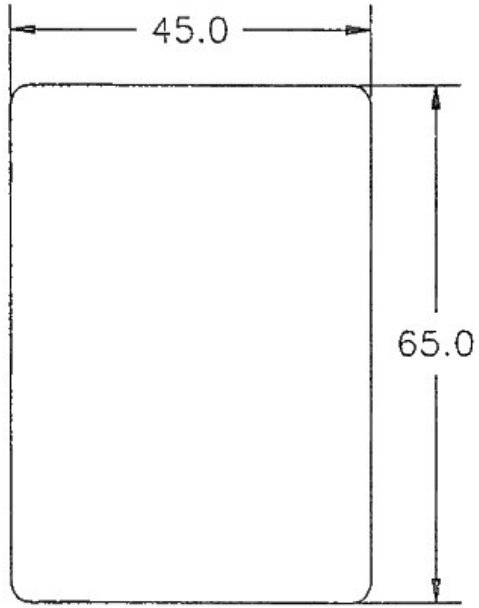

NOTES: (UNLESS OTHERWISE SPECIFIED)
1. ALL DIMENSIONS ARE IN MILLIMETERS.
2. ALL TOLERANCES ARE ±.02mm
3. PRINT SEQUENTIAL SERIAL NUMBERS AS SPECIFIED BY PURCHASE ORDER.
4. MATERIAL: ADHESIVE BACKED, P.V.C., 0.010 THICK MATTE FINISH.
5. FINISH:
6. LOCATE GRAPHIC AS SHOWN. PRINT PER ARTWORK SUPPLIED BY COMMODORE.
7. ALL LINES TO BE .010 WIDE.
8. SEE SHEET 2 FOR REFERENCE ARTWORK.

C.A.D. GENERATED
NO MANUAL CHANGES ARE TO BE MADE TO THIS DOCUMENT.

© 1993 COMMODORE ELECTRONICS LTD.
INFORMATION CONTAINED HEREIN IS THE UNPUBLISHED AND CONFIDENTIAL PROPERTY OF COMMODORE ELECTRONICS LTD. USE, REPRODUCTION OR DISCLOSURE OF THIS INFORMATION

UNLESS OTHERWISE SPECIFIED
TOLERANCES ON: DECIMALS
.X ± .XX ± .XXX ± ∠ ±5
MATERIAL:
FINISH:

		DATE
DRAWN BY:	N. ALCOTT	4/21/93
CHK'D:		
ENGR:		
APPR:		
ENTERED (CAD) BY:	NCA	4/21/93

USED ON: A4000T
NEXT ASSY:

Commodore
1200 WILSON DRIVE
WEST CHESTER, PA. 19380
(215) 431-9100

RATING LABEL, A4000T

SIZE A | 369644 | REV 1

REVISIONS				
ZONE	REV	DESCRIPTION	DATE	APPROVED
		SEE SHEET ONE		

*** ARTWORK TO BE SUPPLIED AT A LATER DATE ***

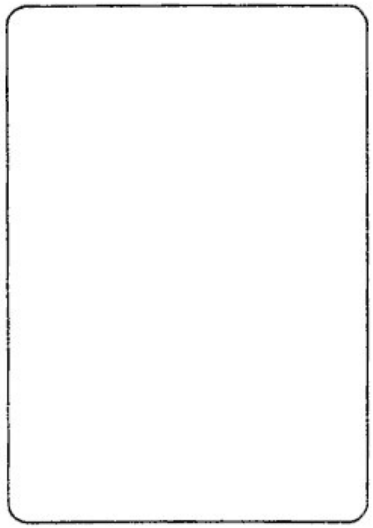

-01 SHOWN

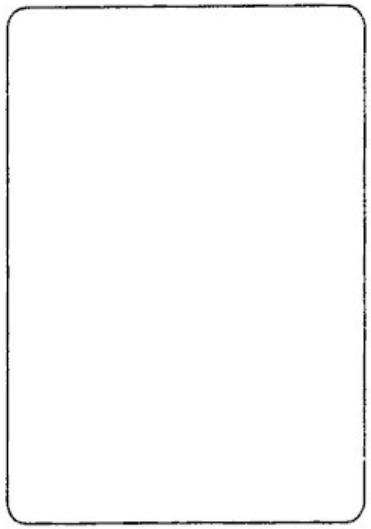

-02 SHOWN

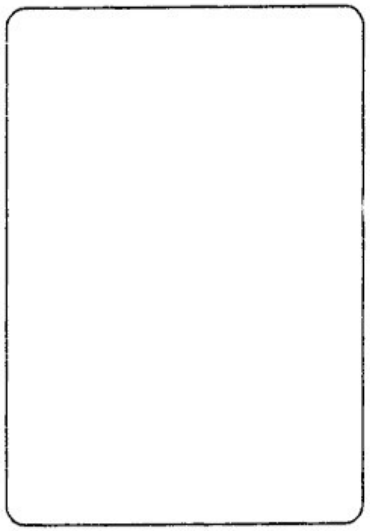

-03 SHOWN

C.A.D. GENERATED
NO MANUAL CHANGES ARE TO BE MADE TO THIS DOCUMENT.

© 1993 COMMODORE ELECTRONICS LTD.
INFORMATION CONTAINED HEREIN IS THE UNPUBLISHED AND CONFIDENTIAL PROPERTY OF COMMODORE ELECTRONICS LTD. USE, REPRODUCTION OR DISCLOSURE OF THIS INFORMATION WITHOUT THE PRIOR WRITTEN PERMISSION OF COMMODORE

UNLESS OTHERWISE SPECIFIED
TOLERANCES ON: DECIMALS
.X ± .XX ± .XXX ± ∠'S ±

MATERIAL:

FINISH:

		DATE
DRAWN BY:	N. ALCOTT	4/21/93
CHKD:		
ENGR:		
APPR:		
ENTERED (CAD) BY:	NCA	4/21/93

USED ON: A4000T
NEXT ASSY:

Commodore
1200 WILSON DRIVE
WEST CHESTER, PA. 19380
(215) 431-9100

RATING LABEL, A4000T

SIZE		REV
A	369644	1

REVISIONS				
ZONE	REV	DESCRIPTION	DATE	APPROVED
	1	ADVANCE ENGINEERING RELEASE	4-23-93	JCB

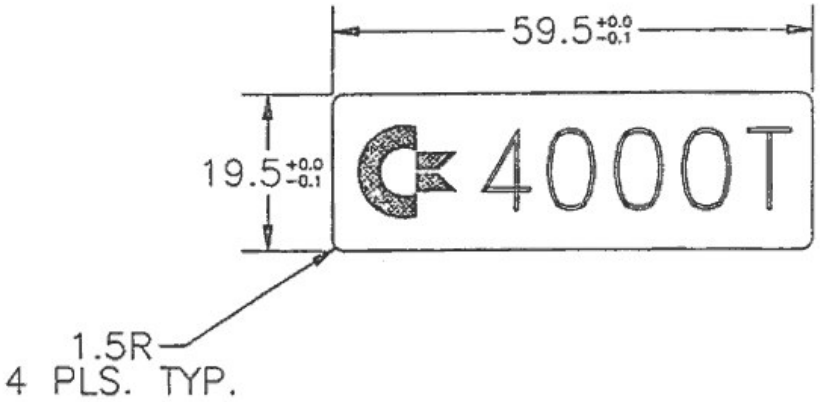

NOTES: (UNLESS OTHERWISE SPECIFIED)
1. ALL DIMENSIONS ARE IN MILLIMETERS.
2. NAMEPLATE IS BLACK WITH DIAMOND CUT LOGO AND LETTERING.
3. MATERIAL: 0.5 THINK ALUMINUM WITH ADHESIVE BACK.

C.A.D. GENERATED
NO MANUAL CHANGES ARE TO BE MADE TO THIS DOCUMENT.

© 1993 COMMODORE ELECTRONICS LTD.
INFORMATION CONTAINED HEREIN IS THE UNPUBLISHED AND CONFIDENTIAL PROPERTY OF COMMODORE ELECTRONICS LTD. USE, REPRODUCTION OR DISCLOSURE OF THIS INFORMATION WITHOUT THE PRIOR WRITTEN PERMISSION OF COMMODORE

UNLESS OTHERWISE SPECIFIED
TOLERANCES ON: DECIMALS
.X ± .XX ± .XXX ± ∠'S ±

		DATE
DRAWN BY:	N. ALCOTT	4/15/93
CHKD:		
ENGR:		
APPR:		
ENTERED (CAD) BY:	NCA	4/15/93

MATERIAL:
FINISH:
USED ON: A4000T
NEXT ASSY:

Commodore
1200 WILSON DRIVE
WEST CHESTER, PA. 19380
(215) 431-9100

NAMEPLATE, A4000T

SIZE		REV
A	365311	1