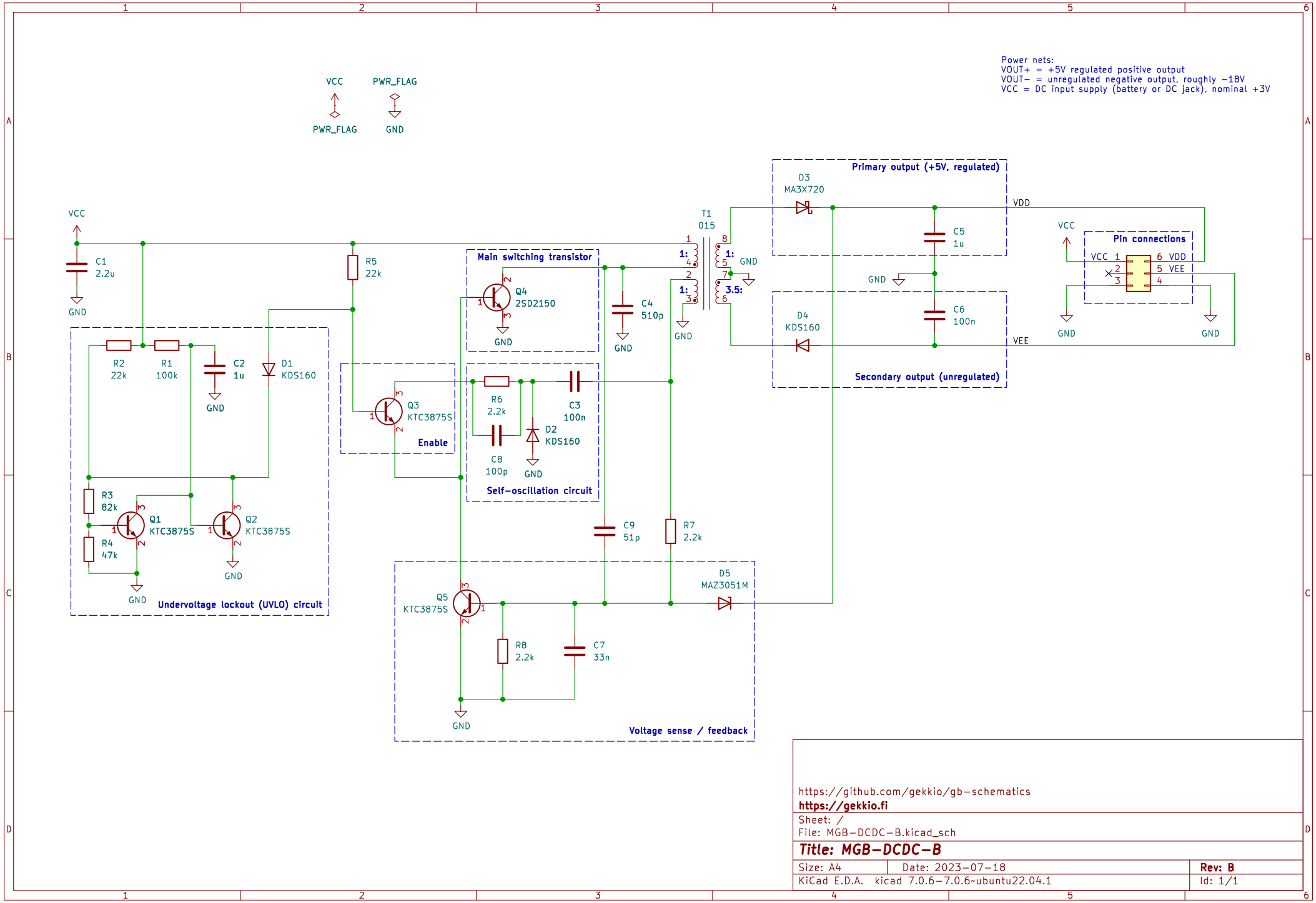

https://github.com/gekkio/gb−schematics
https://gekkio.fi

Sheet: /
File: MGB−DCDC−B.kicad_sch

Title: MGB−DCDC−B

Size: A4	Date: 2023−07−18	**Rev: B**
KiCad E.D.A. kicad 7.0.6−7.0.6~ubuntu22.04.1		Id: 1/1